Rich's lesson module checklist

- ❑ Slides
- ❑ WB converted

- ❑ Flash cards
- ❑ Page numbers
- ❑ 1st minute quiz
- ❑ Web Calendar summary
- ❑ Web book pages
- ❑ Commands

- ❑ Lab tested and uploaded
- ❑ Testing server ready
- ❑ at jobs scheduled
- ❑ Real test uploaded and permissions set

- ❑ 9V backup battery for microphone
- ❑ Backup slides, CCC info, handouts on flash drive

Welcome to CIS 90 Introduction to UNIX/Linux

Shell commands

Secure logins

Navigate file tree

Files and directories

vi editor

Run programs/scripts

Pipes

Filters

Environment variables

Mail

Scheduling tasks

Processes

Permissions

Student Learner Outcomes

1. Navigate and manage the UNIX/Linux file system by viewing, copying, moving, renaming, creating, and removing files and directories.
2. Use the UNIX features of file redirection and pipelines to control the flow of data to and from various commands.
3. With the aid of online manual pages, execute UNIX system commands from either a keyboard or a shell script using correct command syntax.

Introductions and Credits

Jim Griffin
- Created this Linux course
- Created Opus and the CIS VLab
- Jim's site: http://cabrillo.edu/~jgriffin/

Rich Simms
- HP Alumnus
- Started teaching this course in 2008 when Jim went on sabbatical
- Rich's site: http://simms-teach.com

And thanks to:
- John Govsky for many teaching best practices: e.g. the First Minute quizzes, the online forum, and the point grading system (http://teacherjohn.com/)

Student checklist for laying out screen when attending class

- ❑ Browse to the CIS 90 website Calendar page
  1. http://simms-teach.com
  2. Click CIS 90 link on left panel
  3. Click Calendar link near top of content area
  4. Locate today's lesson on the Calendar
- ❑ Download the presentation slides for today's lesson for easier viewing
- ❑ Click Enter virtual classroom to join CCC Confer session
- ❑ Connect to Opus using Putty or ssh command

Student checklist for laying out screen when attending class

- ❑ *Google*
- ❑ *CCC Confer*
- ❑ *Downloaded PDF of Lesson Slides*

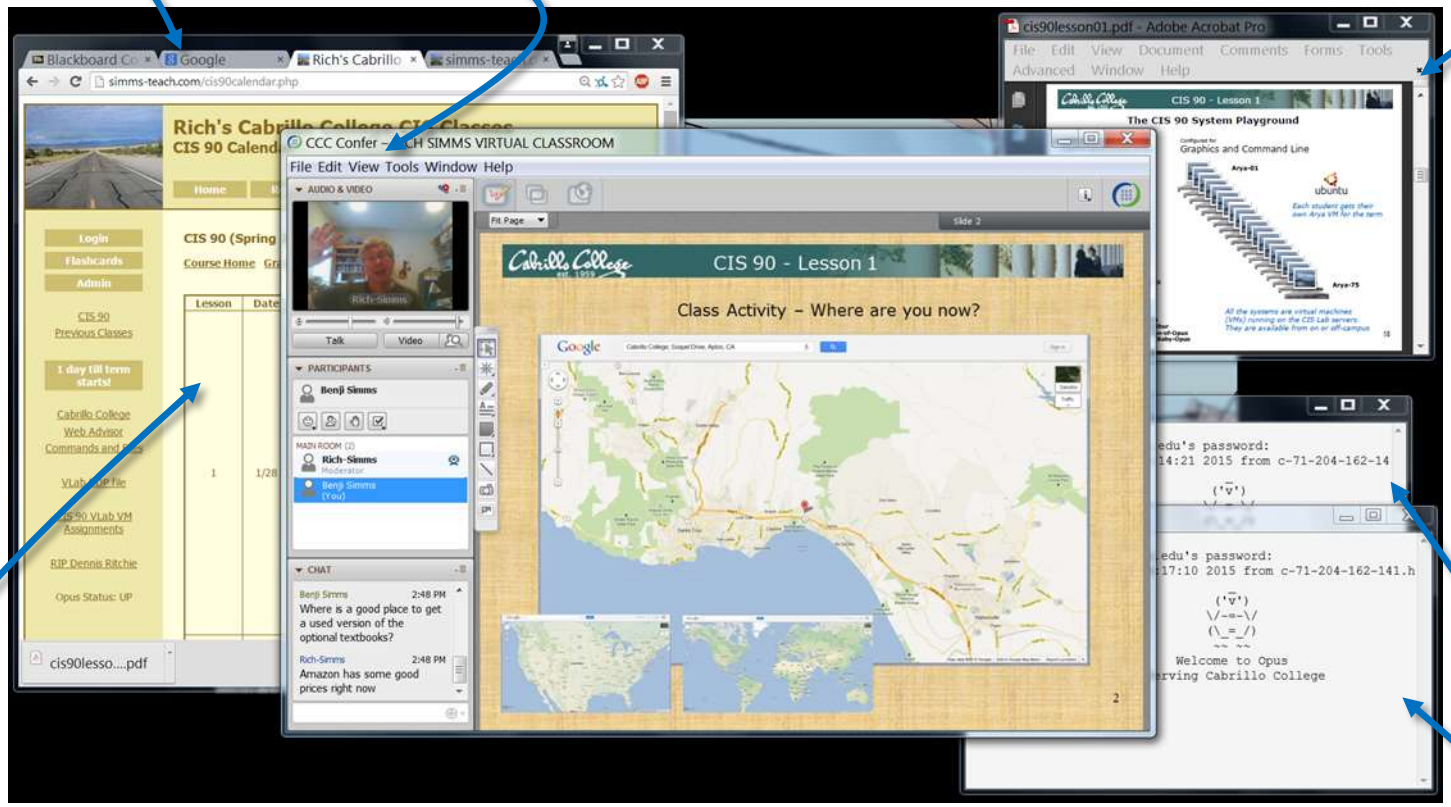

- ❑ *CIS 90 website Calendar page*
- ❑ *One or more login sessions to Opus*

Student checklist for sharing desktop with classmates

1) Instructor gives you sharing privileges

2) Click overlapping rectangles icon. If white "Start Sharing" text is present then click it as well.

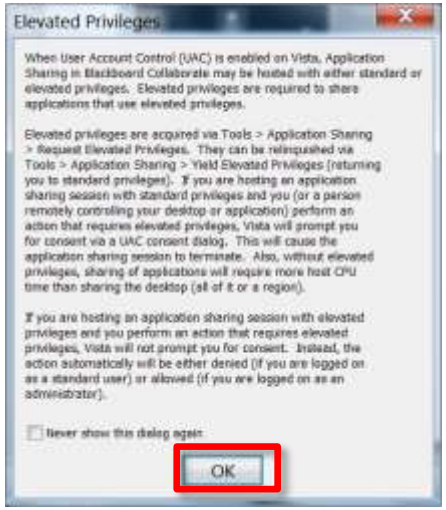

3) Click OK button.

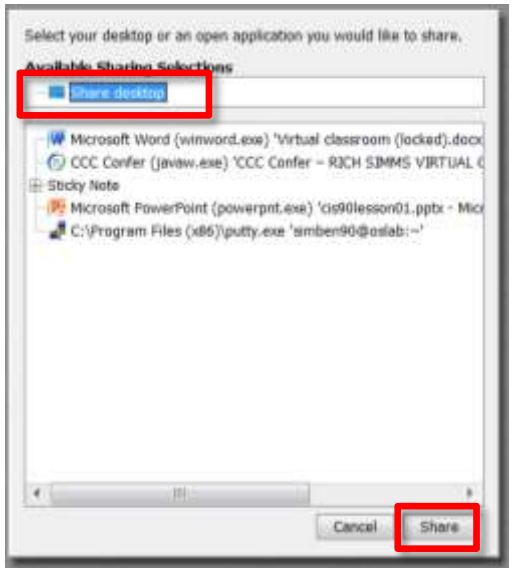

4) Select "Share desktop" and click Share button.

Rich's CCC Confer checklist - setup

[ ] Preload White Board

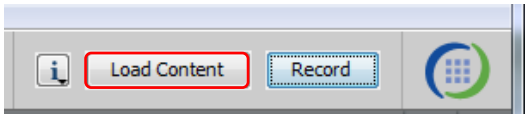

[ ] Connect session to Teleconference

Session now connected to teleconference

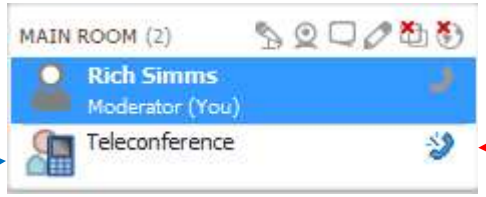

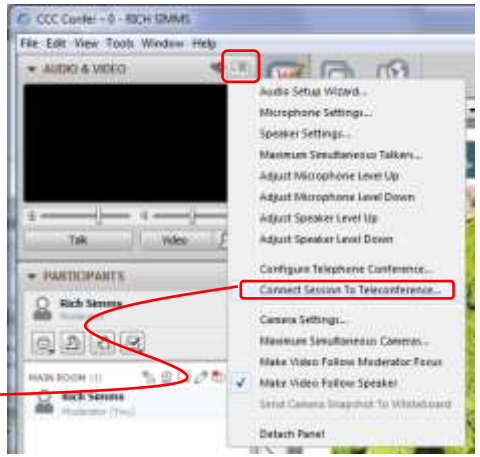

[ ] Is recording on?

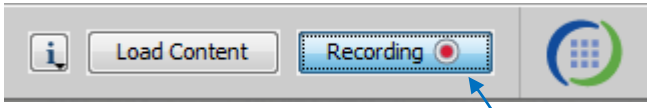

Red dot means recording

[ ] Use teleconferencing, not mic

Should be greyed out

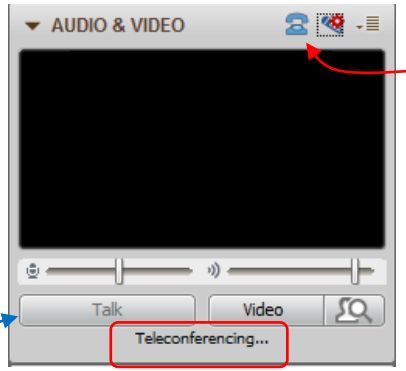

Should show as this live "off hook" telephone handset icon and the Teleconferencing ... message displayed

Rich's CCC Confer checklist - screen layout and share

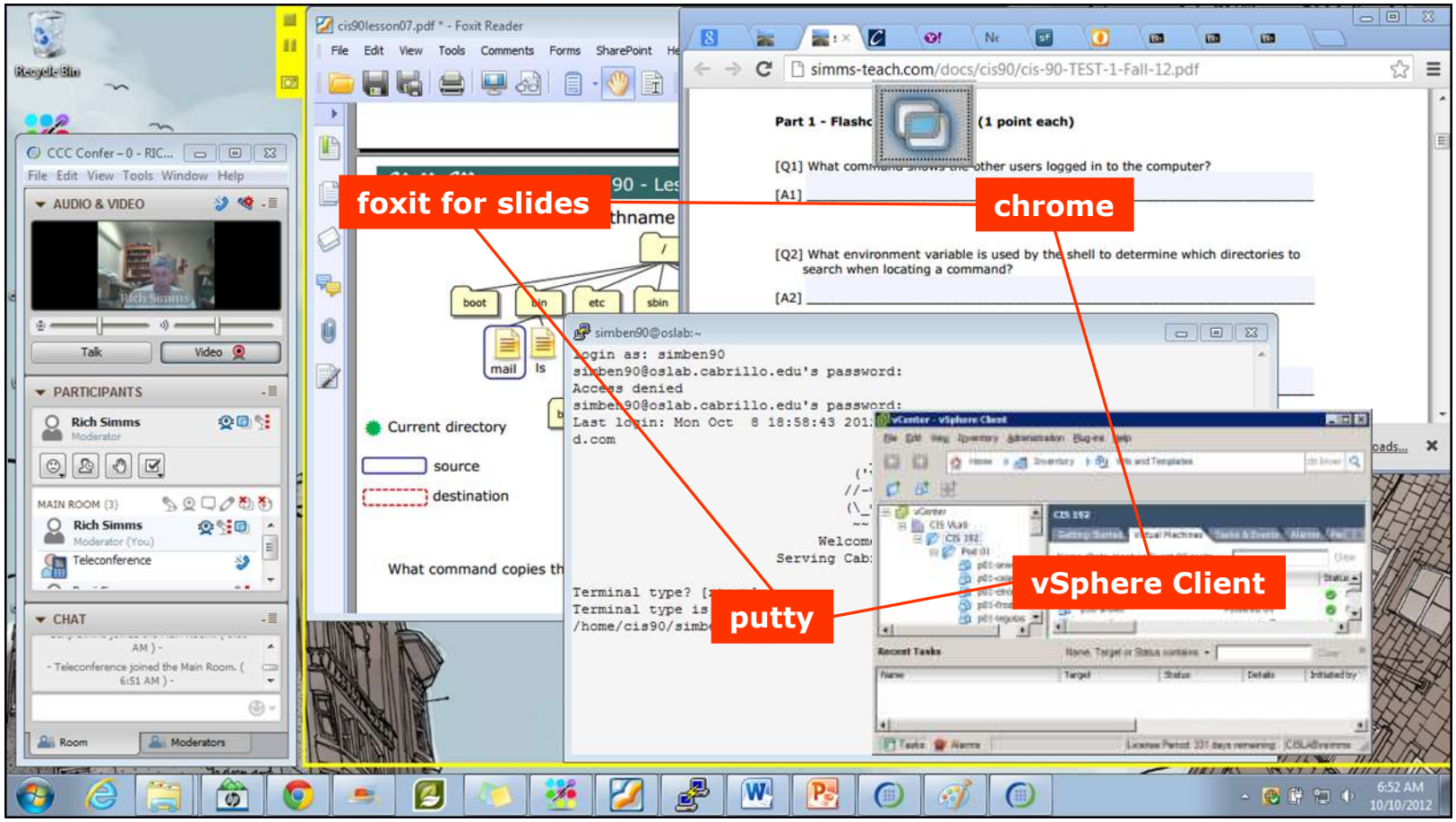

[ ] layout and share apps

Rich's CCC Confer checklist - webcam setup

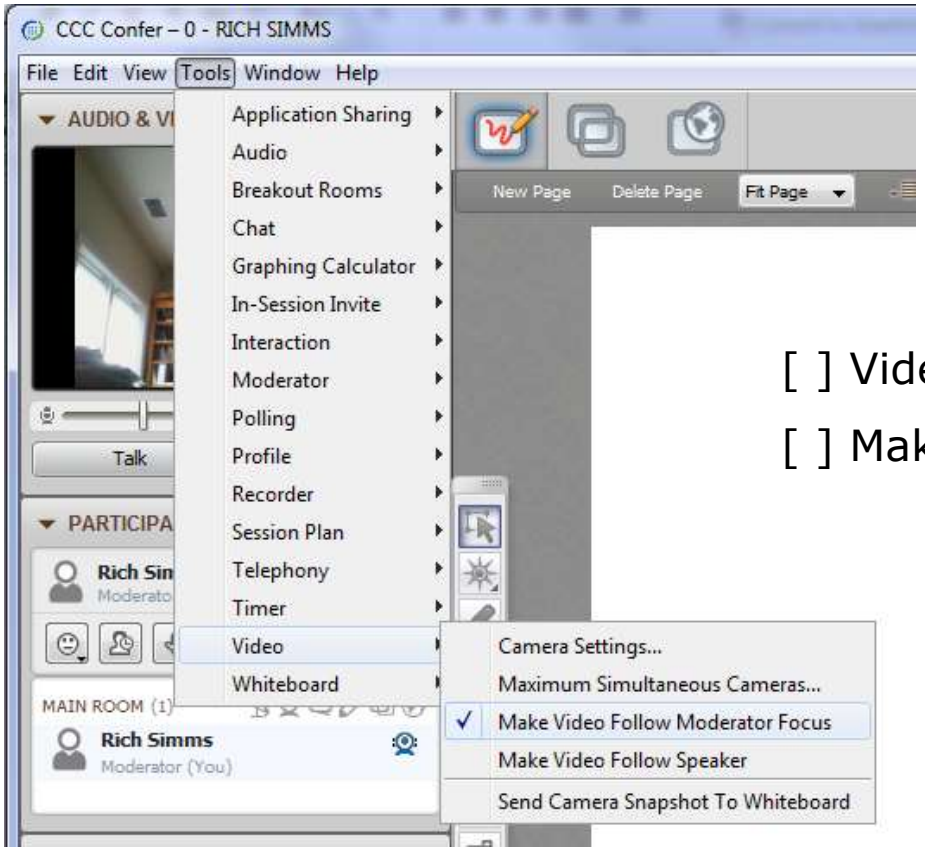

[ ] Video (webcam)

[ ] Make Video Follow Moderator Focus

Rich's CCC Confer checklist - Elmo

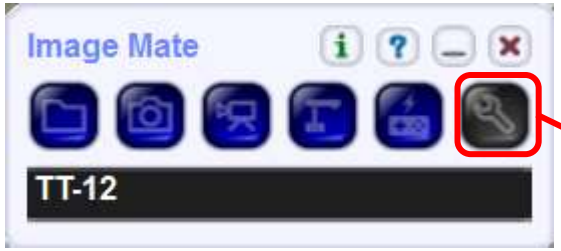

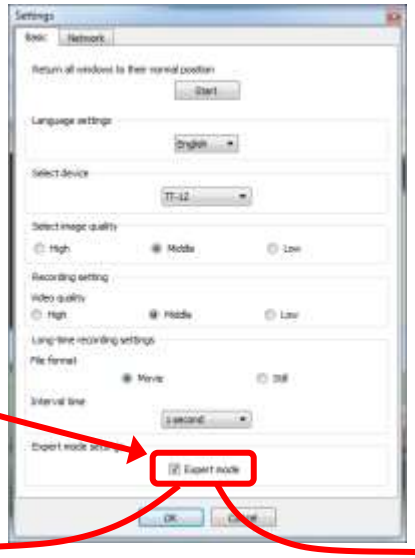

The "rotate image" button is necessary if you use both the side table and the white board.

Quite interesting that they consider you to be an "expert" in order to use this button!

Elmo rotated down to view side table

Elmo rotated up to view white board

Run and share the Image Mate program just as you would any other app with CCC Confer

Rich's CCC Confer checklist - universal fix

Universal Fix for CCC Confer:

1) Shrink (500 MB) and delete Java cache
2) Uninstall and reinstall latest Java runtime
3) http://www.cccconfer.org/support/technicalSupport.aspx

Control Panel (small icons)

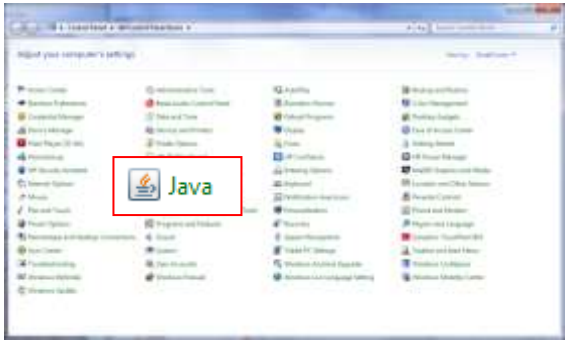

General Tab > Settings…

500MB cache size

Delete these

Google Java download

Start

Sound Check

*Students that dial-in should mute their line using *6 to prevent unintended noises distracting the web conference.*

*Instructor can use *96 to mute all student lines.*

CIS 90 - Lesson 10

Instructor: **Rich Simms**
Dial-in: **888-886-3951**
Passcode: **136690**


Chris

Jeremy

Jennifer

Cameron

Joseph


Lisa


May

Sundance

Charlie

Sean

Brenda

Anthony

Will H.


Josh

Michael

Danny


Vic

William D.

Taylor


Thomas

Stewart

Miguel

Akasha

Jairo


Tony

Joaquin

Email me (risimms@cabrillo.edu) a relatively current photo of your face for 3 points extra credit

First Minute Quiz

Please answer these questions **in the order** shown:

No Quiz today … test instead

For credit email answers to:

`risimms@cabrillo.edu`

within the **first few minutes of class**

UNIX Processes

Objectives	Agenda
• Know the process life cycle • Interpret ps command output • Run or schedule jobs to run in the background • Send signals to processes • Configure process load balancing	• Questions • Housekeeping • FYI: shell debugging • Process definition • Process life cycle • ps command • Job control • Signals • Load balancing • Assignment • Wrap up • Test #2

Questions

Questions?

- Graded work in home directories
- Answers in /home/cis90/answers

Lesson material?

Labs? Tests?

How this course works?

Who questions much, shall learn much, and retain much.
- Francis Bacon

If you don't ask, you don't get.
- Mahatma Gandhi

Chinese Proverb	他問一個問題，五分鐘是個傻子，他不問一個問題仍然是一個傻瓜永遠。 *He who asks a question is a fool for five minutes; he who does not ask a question remains a fool forever.*

Would you like some help learning Linux?

If you would like some additional come over to the CIS Lab. There are student lab assistants and instructors there to help you.

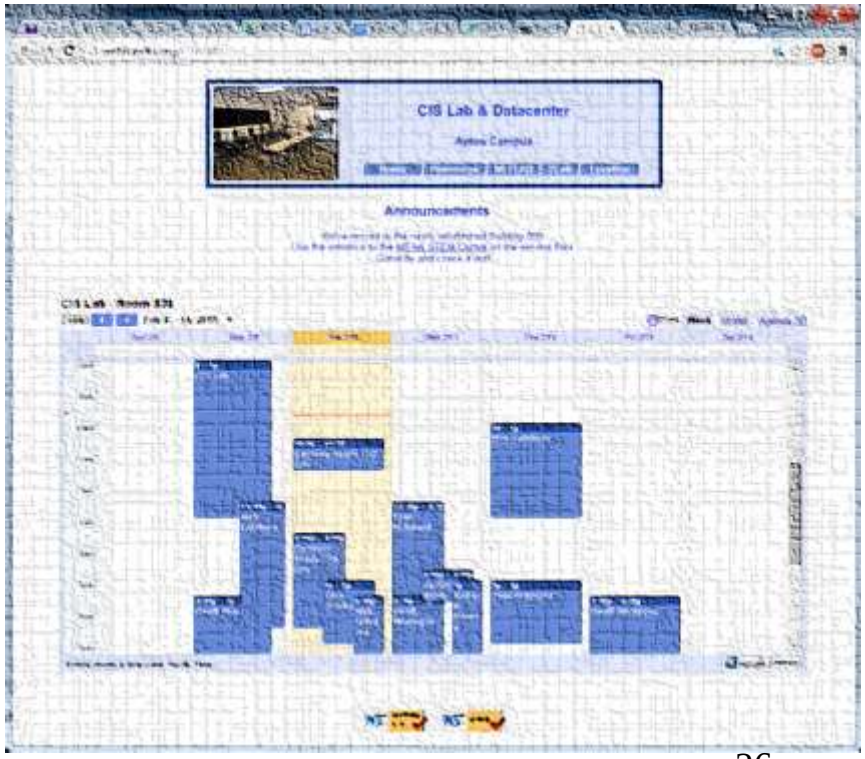

Tess, Michael, and Paul are CIS 90 Alumni.

Mike Matera is the other Linux instructor.

I'm in there Mondays.

FYI

shell debugging and {}

The Shell **Parse** Step

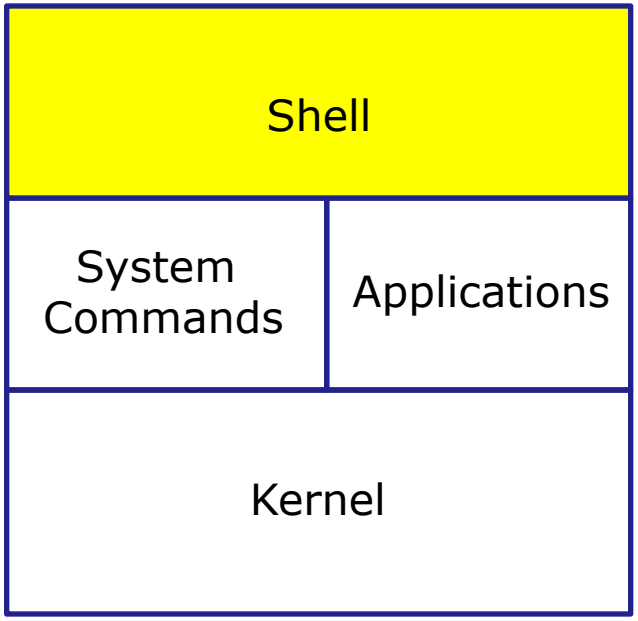

1) **Prompt** for a command
2) **Parse** (interpret metacharacters, expand file names and dissect command line into options and arguments)
3) **Search** for program (along the path)
4) **Execute** program by loading into memory (becomes a process), hookup input and outputs, and pass along command line options and arguments.
5) **Nap** (wait till process is done)
6) **Repeat**

Important Concept to Understand

- It's a **team effort** between the **shell** and the **command** to process what a user types after the prompt
- The shell does the initial work during the **parse step** and provides a list of options and arguments to the command
- The command may not see everything the user actually typed in

FYI **set -x, set +x**

FYI only

```
/home/cis90/rodduk $ set -x
+ set -x
++ echo -ne '\033]0;rodduk@opus:~'
```

Enable shell debugging

Shows what arguments are actually passed to the command being run

```
/home/cis90/rodduk $ type /bin/pi*
+ type /bin/ping /bin/ping6
/bin/ping is /bin/ping
/bin/ping6 is /bin/ping6
++ echo -ne '\033]0;rodduk@opus:~'

/home/cis90/rodduk $ type -af /usr/bin/p[ek]*[ct] 2> /dev/null
+ type -af /usr/bin/perlcc /usr/bin/perldoc /usr/bin/pkcs11_inspect
/usr/bin/perlcc is /usr/bin/perlcc
/usr/bin/perldoc is /usr/bin/perldoc
/usr/bin/pkcs11_inspect is /usr/bin/pkcs11_inspect
++ echo -ne '\033]0;rodduk@opus:~'
```

```
/home/cis90/rodduk $ set +x
+ set +x
/home/cis90/rodduk $
```

Disable shell debugging

FYI **set -x, set +x**

FYI only

```
/home/cis90/rodduk $ set -x
+ set -x
++ echo -ne '\033]0;rodduk@opus:~'
```

Enable shell debugging

```
/home/cis90/rodduk $ find . -name '$LOGNAME'
+ find . -name '$LOGNAME'
find: ./Hidden: Permission denied
find: ./testdir: Permission denied
++ echo -ne '\033]0;rodduk@opus:~'

/home/cis90/rodduk $ find . -name "$LOGNAME"
+ find . -name rodduk
find: ./Hidden: Permission denied
./rodduk
find: ./testdir: Permission denied
++ echo -ne '\033]0;rodduk@opus:~'
```

Shows variables in double (weak) quotes get expanded, while those in single (strong) quotes do not

```
/home/cis90/rodduk $ set +x
+ set +x
/home/cis90/rodduk $
```

Disable shell debugging

FYI **set -x, set +x**

FYI only

```
/home/cis90/milhom $ set -x
++ printf '\033]0;%s@%s:%s\007' milhom90 oslab '~'

/home/cis90/milhom $ find . -name *treat*
+ find . -name treat1
find: `./Hidden': Permission denied
./treat1
++ printf '\033]0;%s@%s:%s\007' milhom90 oslab '~'

/home/cis90/milhom $ find . -name *trick*
+ find . -name '*trick*'
find: `./Hidden': Permission denied
./Miscellaneous/.trick6
./Poems/Shakespeare/.trick3
./Poems/Yeats/.trick2
./Poems/.trick5
./Poems/Blake/.trick4
./.ssh/.trick1
++ printf '\033]0;%s@%s:%s\007' milhom90 oslab '~'

/home/cis90/milhom $ set +x
+ set +x
/home/cis90/milhom $
```

Enable shell debugging

Shows how filename expansion metacharacters are expanded or not depending on whether a match was found!

Disable shell debugging

FYI using {}

FYI only

The braces {} are filename expansion metacharacters

```
/home/cis90/simben $ mkdir fast
/home/cis90/simben $ ls fast
/home/cis90/simben $ touch fast/file{1,2,3,4,5}
/home/cis90/simben $ ls fast
file1  file2  file3  file4  file5
```

Short hand for specifying multiple filenames at once

```
/home/cis90/simben $ set -x
++ echo -ne '\033]0;simben90@opus:~'

/home/cis90/simben $ touch fast/file{1,2,3,4,5}
+ touch fast/file1 fast/file2 fast/file3 fast/file4 fast/file5
++ echo -ne '\033]0;simben90@opus:~'
```

Showing how bash did the expansion above


```
/home/cis90/simben $ find -name *treat*
find: `./Hidden': Permission denied
./treat1

/home/cis90/simben $ find -name *trick*
find: `./Hidden': Permission denied
./poems/Shakespeare/.trick4
./poems/Yeats/.trick3
./poems/Neruda/.trick5
./poems/Dickenson/.trick6
./.testdir/.trick1
./.ssh/.trick2
/home/cis90/simben $
```

Why does the first command only find <u>one</u> of the six *treat* files … yet the second command finds all <u>six</u> *trick* files?

Put your answer in the chat window

Housekeeping

Housekeeping

1. Nothing is due today!

2. Lab 8 is due next week

3. Practice Test server will shut down shortly before the real test starts.

4. Test 2 during the last hour of class today
   - Blackboard - timed test - 60 minutes
   - OPEN book, notes, computer
   - CLOSED mouths (work solo, don't ask for or give assistance to others)
   - Working students may take the test later in the day but it must be submitted by 11:59PM

Test Instructions

HONOR CODE:

This test is open book, open notes, and open computer. HOWEVER, you must work alone. You may not discuss the test questions or answers with others during the test period. You may not ask or receive assistance from anyone other than the instructor when doing this test. Likewise you may not give any assistance to anyone taking the test.

INSTRUCTIONS:

Test system: sun-hwa-t2.cis.cabrillo.edu (port 22)

This test should be completed using the sun-hwa-t2 system only. Because this system is on a private network log into Opus first then ssh into sun-hwa-t2.

Grading will be based on your answers AND that you correctly implemented the "DO THIS FIRST" portion of each question.

If you get stuck on a question you can ask the instructor for the answer and forfeit the points. The instructor will be available during the classroom test and available by email later in the evening from 8:00-10:PM.

Please KEEP YOUR ANSWERS TO A SINGLE LINE ONLY !!

This test must be completed in one sitting. The submittal will be made automatically when the time is up. If you submit early by accident you will not be able to re-enter and continue. If that happens don't panic! Just email the instructor any remaining answers before the time is up.

Heads up on Final Exam

Test #3 (final exam) is MONDAY Dec 14 1-3:50PM

Monday	12/14	**Test #3 (the final exam)** **Time** • MONDAY 1:00PM - 3:50PM in Room 828 **Materials** • Test (blackboard) **CCC Confer** • Enter virtual classroom • Class archives		5 posts Lab X1 Lab X2

Extra credit labs and final posts due by 11:59PM

- All students will take the test at the same time. The test must be completed by 3:50PM.
- Working and long distance students can take the test online via CCC Confer and BlackBoard.
- Working students will need to plan ahead to take time off from work for the test.

Where to find your grades

Send me your survey to get your LOR code name.

The CIS 90 website Grades page

http://simms-teach.com/cis90grades.php

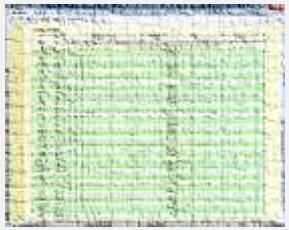

Points that could have been earned:

7 quizzes:	21 points
7 labs:	210 points
1 test:	30 points
2 forum quarters:	40 points
Total:	**301 points**

Percentage	Total Points	Letter Grade	Pass/No Pass
90% or higher	504 or higher	A	Pass
80% to 89.9%	448 to 503	B	Pass
70% to 79.9%	392 to 447	C	Pass
60% to 69.9%	336 to 391	D	No pass
0% to 59.9%	0 to 335	F	No pass

At the end of the term I'll add up all your points and assign you a grade using this table

Or check on Opus

checkgrades *codename*

(where codename is your LOR codename)

Written by Jesse Warren a past CIS 90 Alumnus

grades *codename*

(where codename is your LOR codename)

Written by Sam Tindell a past CIS 90 Alumnus.
Try his tips, schedule and forums scripts as well!

Process Definition

The Shell **Execute** Step

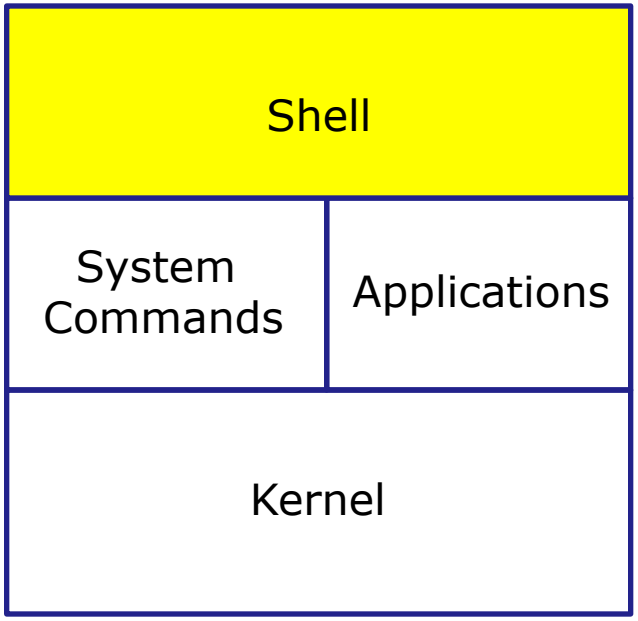

1) **Prompt** for a command
2) **Parse** (interpret metacharacters, expand file names and dissect command line into options and arguments)
3) **Search** for program (along the path)
4) **Execute** program by loading it into memory (as a process) and providing it with the parsed options/arguments. In addition hook up all inputs and outputs (stdin, stdout and stderr)
5) **Nap** (wait till process is done)
6) **Repeat**

Definition of a process

*A **process** is a **program** that has been copied (loaded) into memory by the kernel and is either running (executing instructions) or waiting to run.*

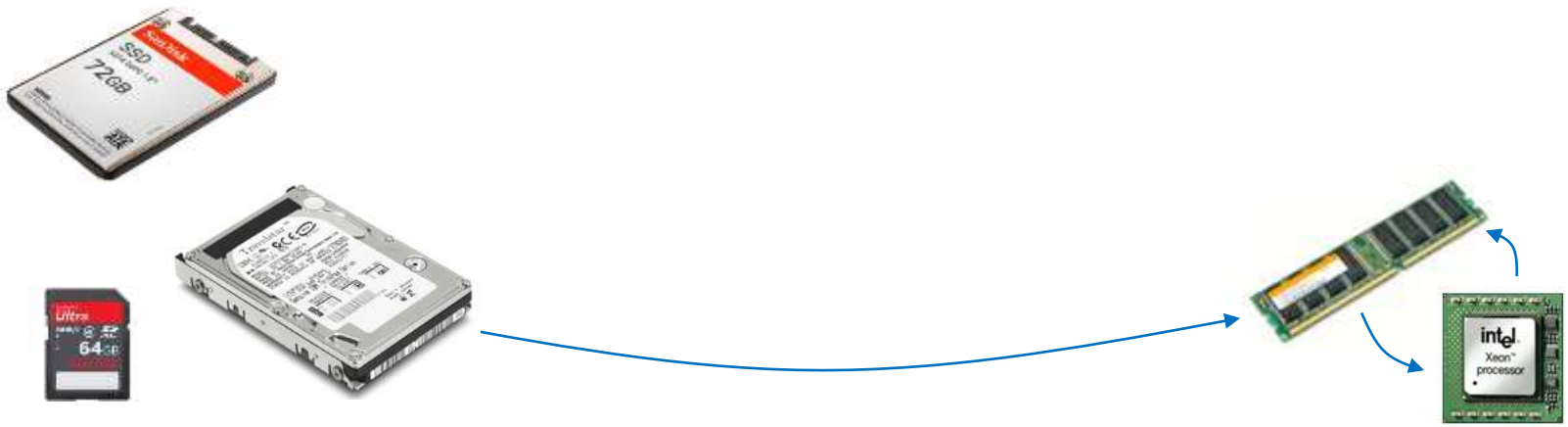

Program to process

```
/home/cis90/simben $cmd
```

*A **process** is a **program** that has been loaded into memory and is either running (executing instructions) or waiting to run*

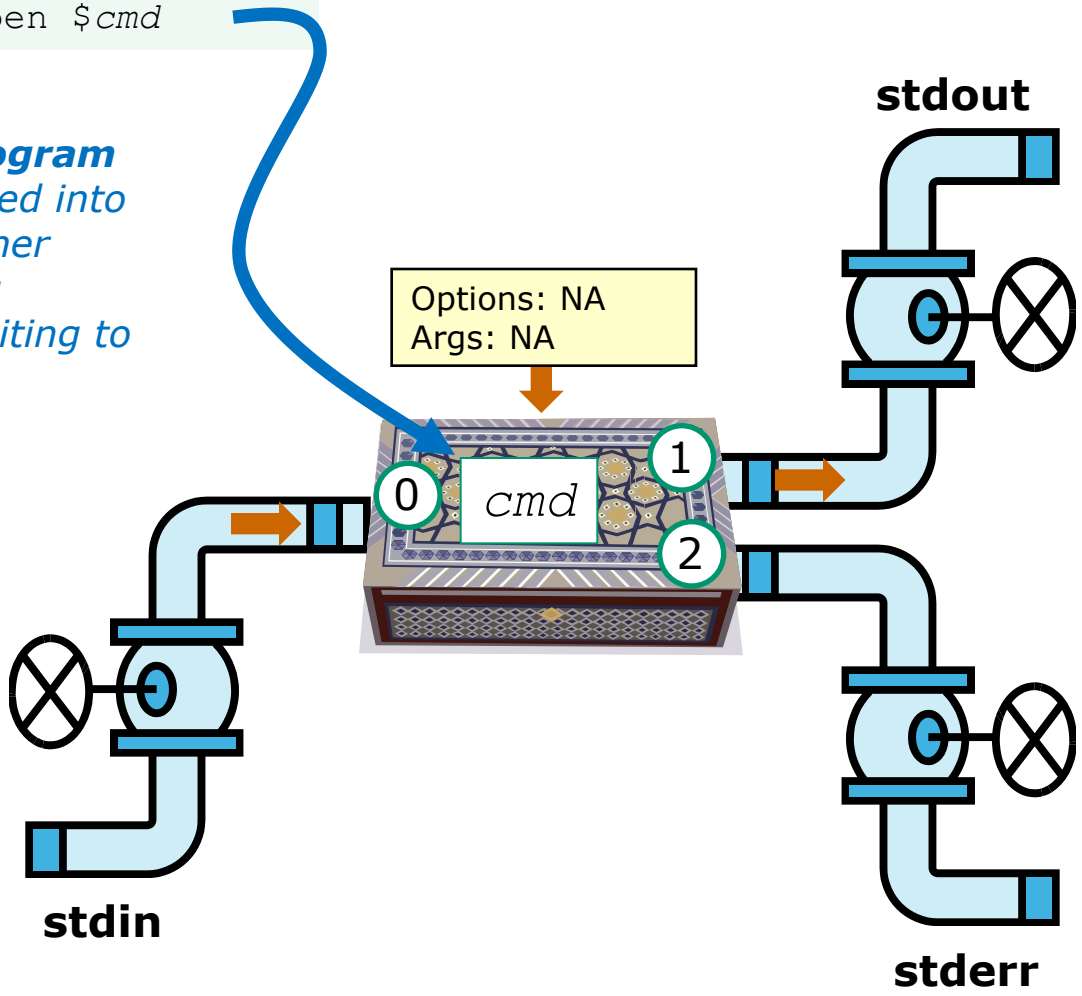

Example program to process: sort command

```
/home/cis90/simben $ sort
duke
benji
star
homer
benji
duke
homer
star
```

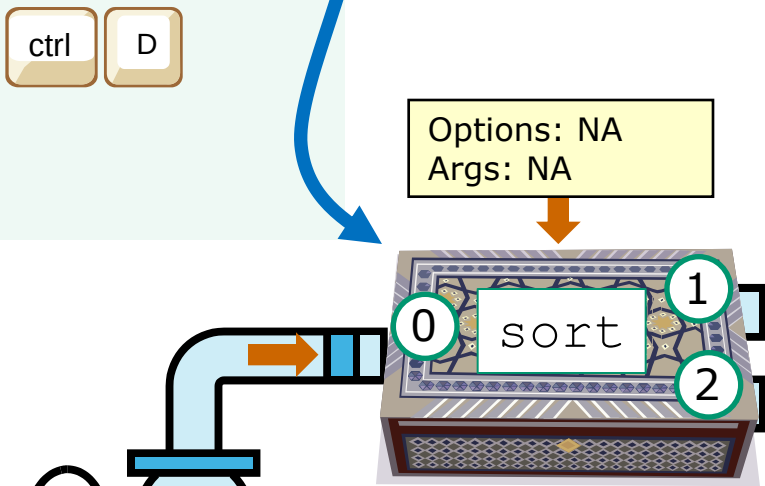

*A command like sort is a **program** when it is stored on the hard drive. It is a **process** when it is copied to memory by the kernel and either running or waiting to run.*

Assembly Language Tutorial - Mozilla Firefox

File Edit View History Bookmarks Tools Help

http://www.hep.wisc.edu/~pinghc/x86AssmTutorial.htm

Disable Cookies CSS Forms Images Information Miscellaneous Outline Resize Tools

(0 unread) Yahoo! Mail, richsimms | Rich's Cabrillo College CIS Classe... | Assembly Language Tutorial

A simple example:

```
CODE
void funtction1() {
        int A = 10;
        A += 66;
}

compiles to...
funtction1:
1       pushl %ebp #
2       movl %esp, %ebp #,
3       subl $4, %esp #,
4       movl $10, -4(%ebp) #, A
5       leal -4(%ebp), %eax #,
6       addl $66, (%eax) #, A
7       leave
8       ret
Explanation:
1. push ebp
2. copy stack pointer to ebp
3. make space on stack for local data
4. put value 10 in A (this would be the address A has now)
5. load address of A into EAX (similar to a pointer)
6. add 66 to A
... don't think you need to know the rest
```

Mixing C and Assembly Language

The way to mix C and assembly language is to use the "asm" directive. To access C-language variables from inside of assembly language, you simply use the C identifier name as a memory operand. These variables cannot be local to a procedure, and also cannot be static inside a procedure. They *must* be global (but can be static global). The

Done

Many programs are written in the C language

The C compiler translates the C code into binary machine code instructions the CPU can execute.

http://www.hep.wisc.edu/~pinghc/x86AssmTutorial.htm

Example program to process: sort command

```
[rsimms@opus ~]$ type sort
sort is /bin/sort
```

*Use **type** to find where the sort program is located*

*Use **file** to see sort is a binary executable*

```
[rsimms@opus ~]$ file /bin/sort
/bin/sort: ELF 32-bit LSB executable, Intel 80386, version 1 (SYSV), for GNU/Linux
2.6.9, dynamically linked (uses shared libs), for GNU/Linux 2.6.9, stripped
[rsimms@opus ~]$
```

```
[rsimms@opus ~]$ xxd /bin/sort | more

0000000: 7f45 4c46 0101 0100 0000 0000 0000 0000  .ELF............
0000010: 0200 0300 0100 0000 e093 0408 3400 0000  ............4...
0000020: 2cdb 0000 0000 0000 3400 2000 0800 2800  ,.......4. ...(.
0000030: 1f00 1e00 0600 0000 3400 0000 3480 0408  ........4...4...
0000040: 3480 0408 0001 0000 0001 0000 0500 0000  4...............
0000050: 0400 0000 0300 0000 3401 0000 3481 0408  ........4...4...
0000060: 3481 0408 1300 0000 1300 0000 0400 0000  4...............
```

< snipped >

*Use **xxd** to produce a hexadecimal dump of the sort file*

*A command like **sort** is a **program** when it is stored on the drive. It is a **process** when it is copied to memory by the kernel and either running or waiting to run by the CPU*

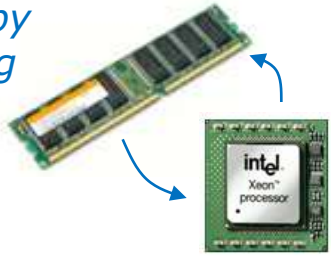

Process Life Cycle

The Shell **Execute** Step

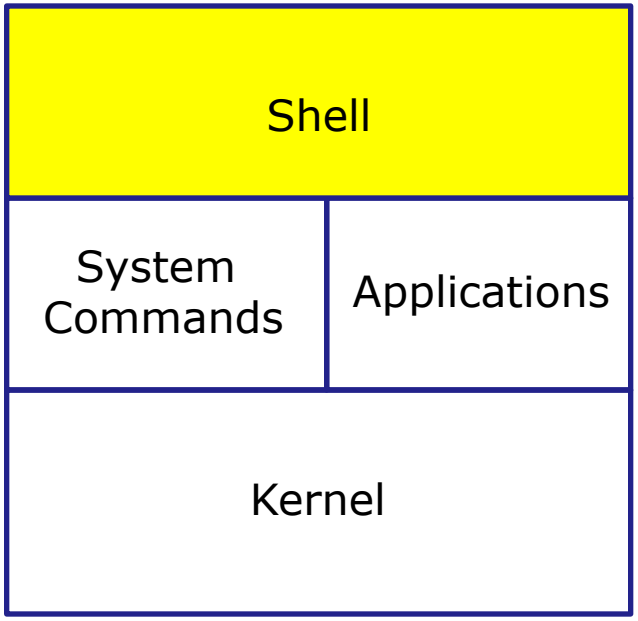

1) **Prompt** for a command
2) **Parse** (interpret metacharacters, expand file names and dissect command line into options and arguments)
3) **Search** for program (along the path)
4) **Execute** program by loading it into memory (as a process) and providing it with the parsed options/arguments. In addition hook up all inputs and outputs (stdin, stdout and stderr)
5) **Nap** (wait till process is done)
6) **Repeat**

Executing a command <*cmd*>

```
/home/cis90/simben $<cmd>
```

*A **process** is a **program** that has been loaded into memory and is either running (executing instructions) or waiting to run*

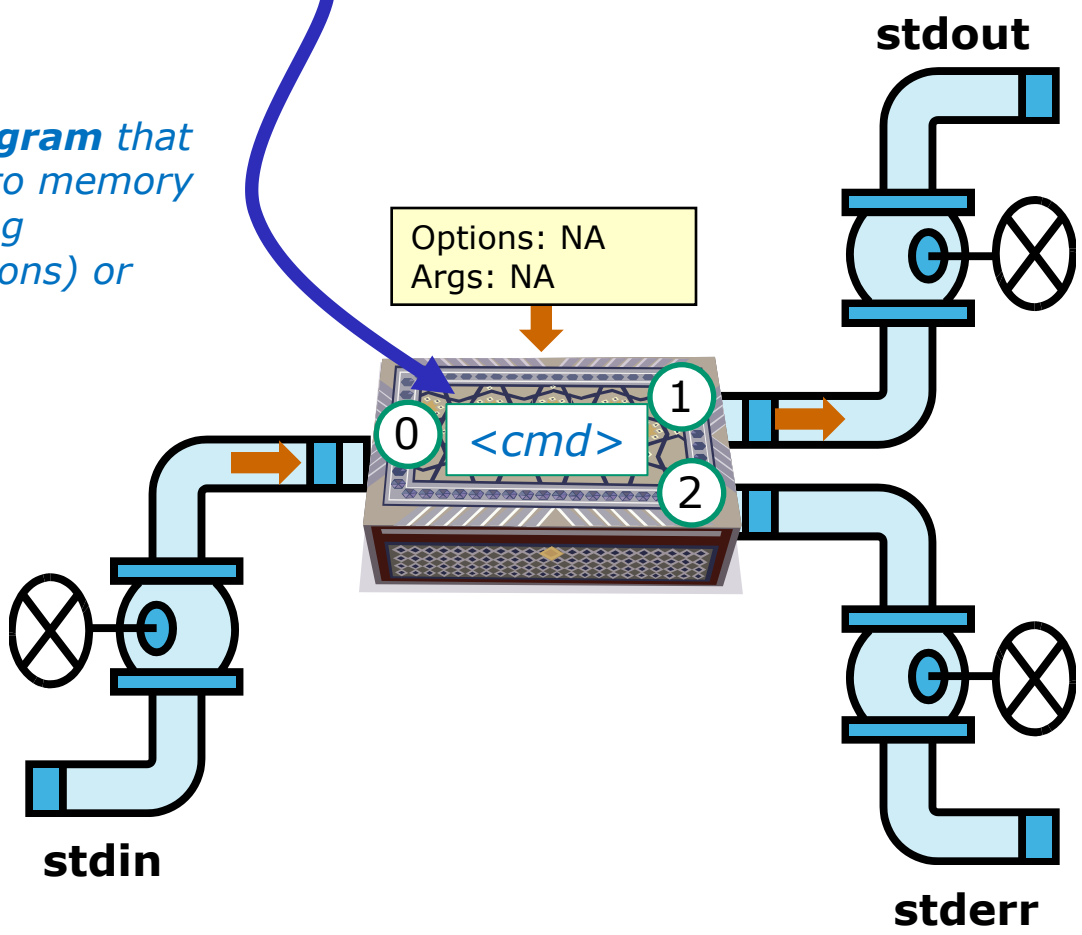

Process Lifecycle

Note: This diagram shows a generic command "<cmd>" being loaded and executed for the user by the bash shell.

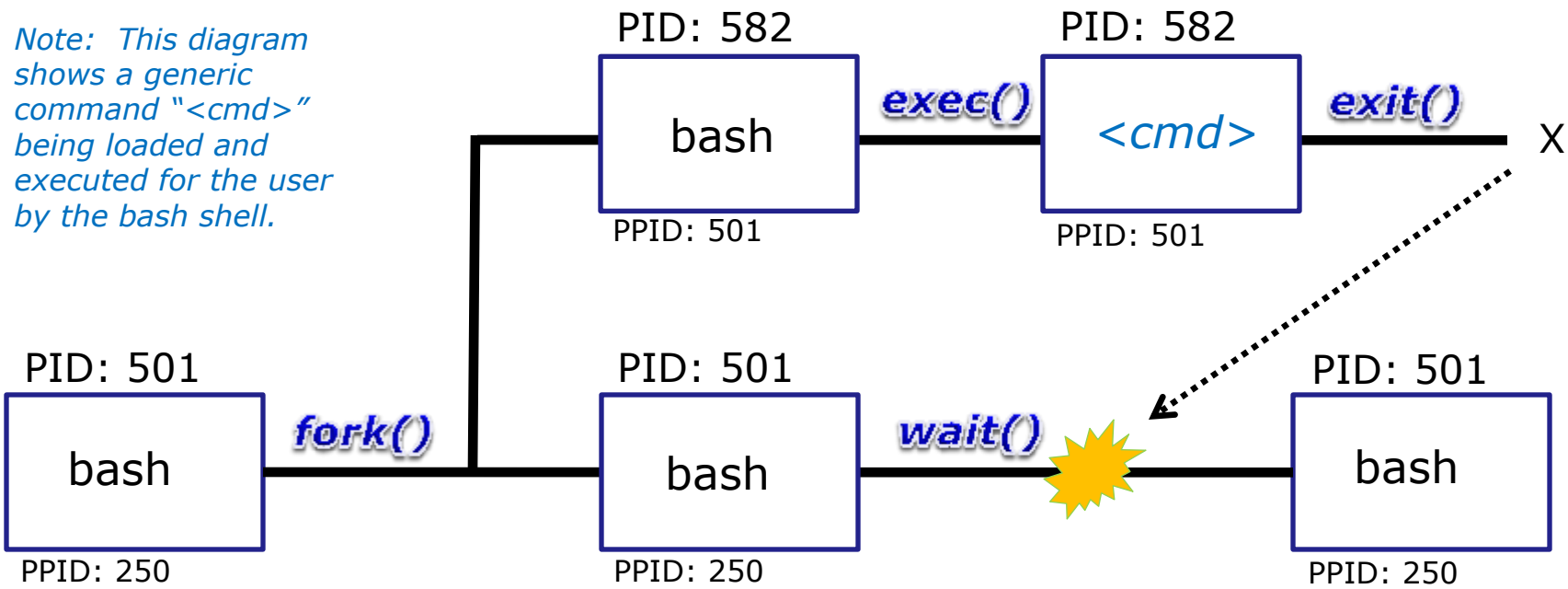

*A process uses system calls (e.g. **fork**, **exec**, **wait**, **exit**) to request services from the kernel*

Process Lifecycle - fork child process

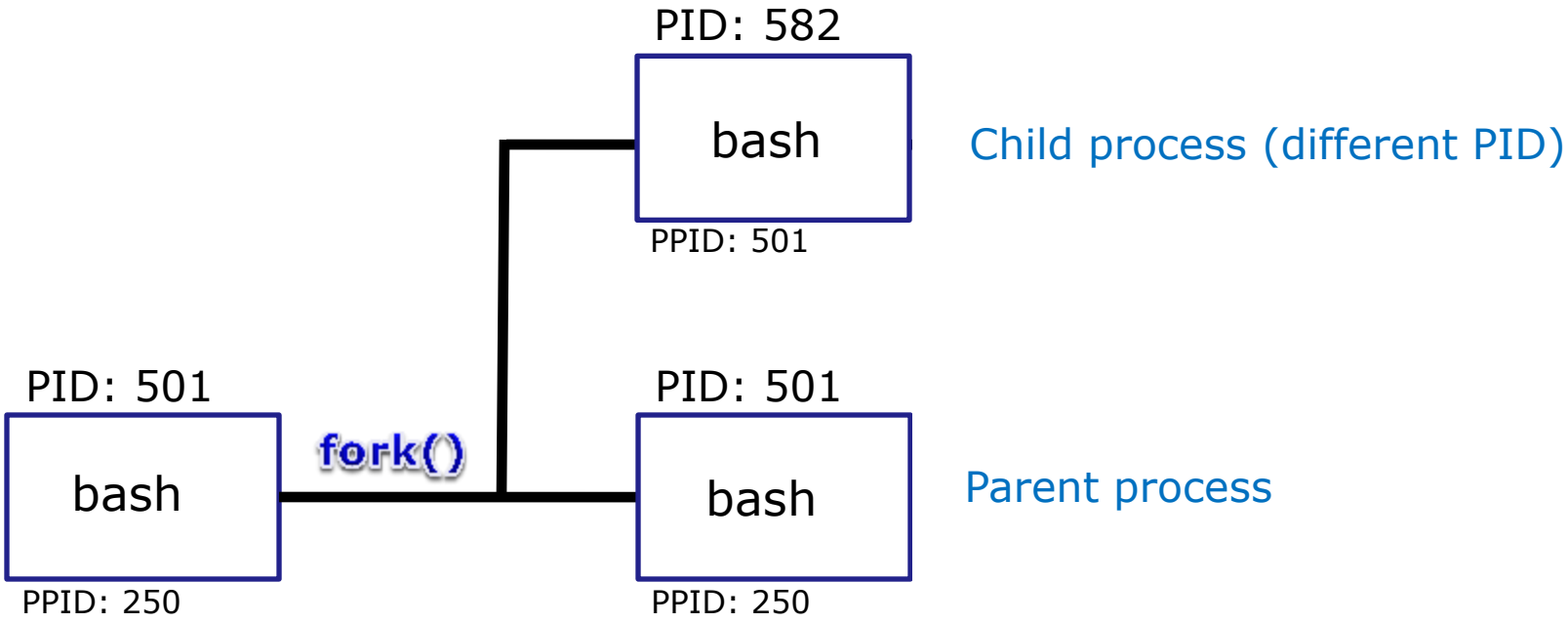

1) The first step in executing a command is to create a new child process

- This is done by the **parent** process (bash) making a copy of itself using the ***fork*** system call.
- The new **child** process is a duplicate of the **parent** but it has a different PID.

Process Lifecycle

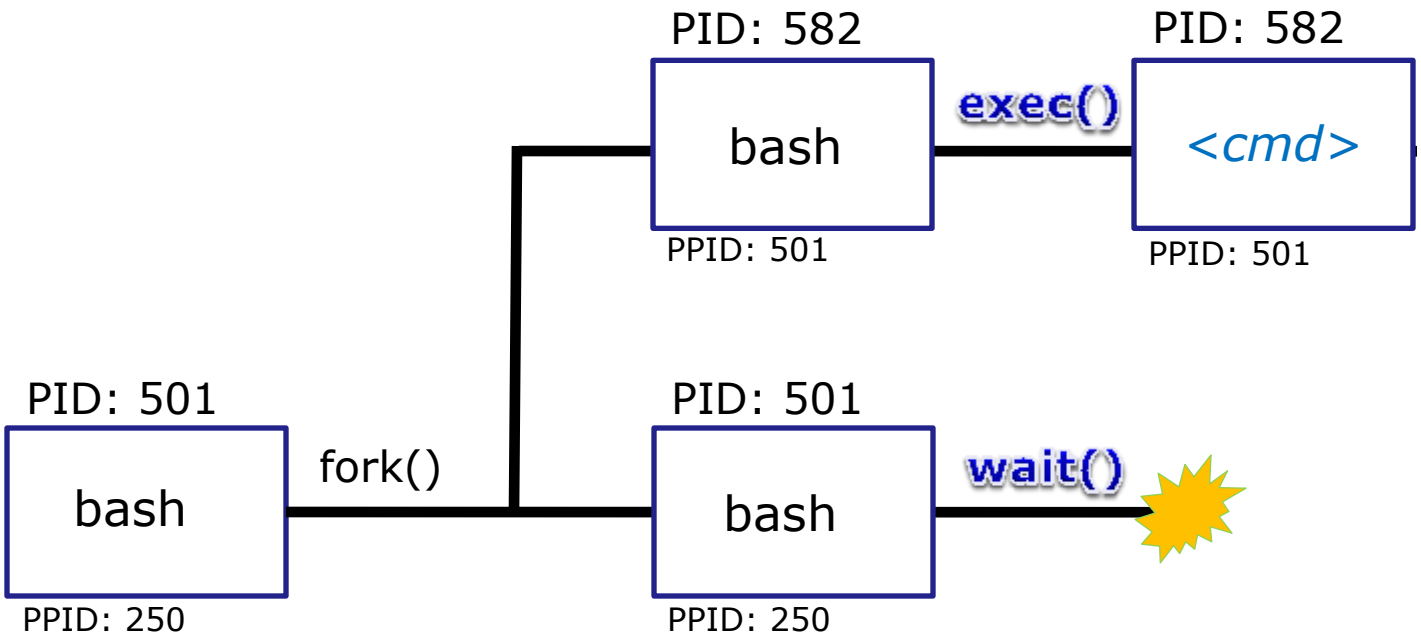

2) The next step is to load the command into the new child process

- An **exec** system call is issued to overlay the **child** process with the instructions of the requested command. The new instructions then are executed.
- The **parent** process issues the **wait** system call and goes to sleep.

Process Lifecycle

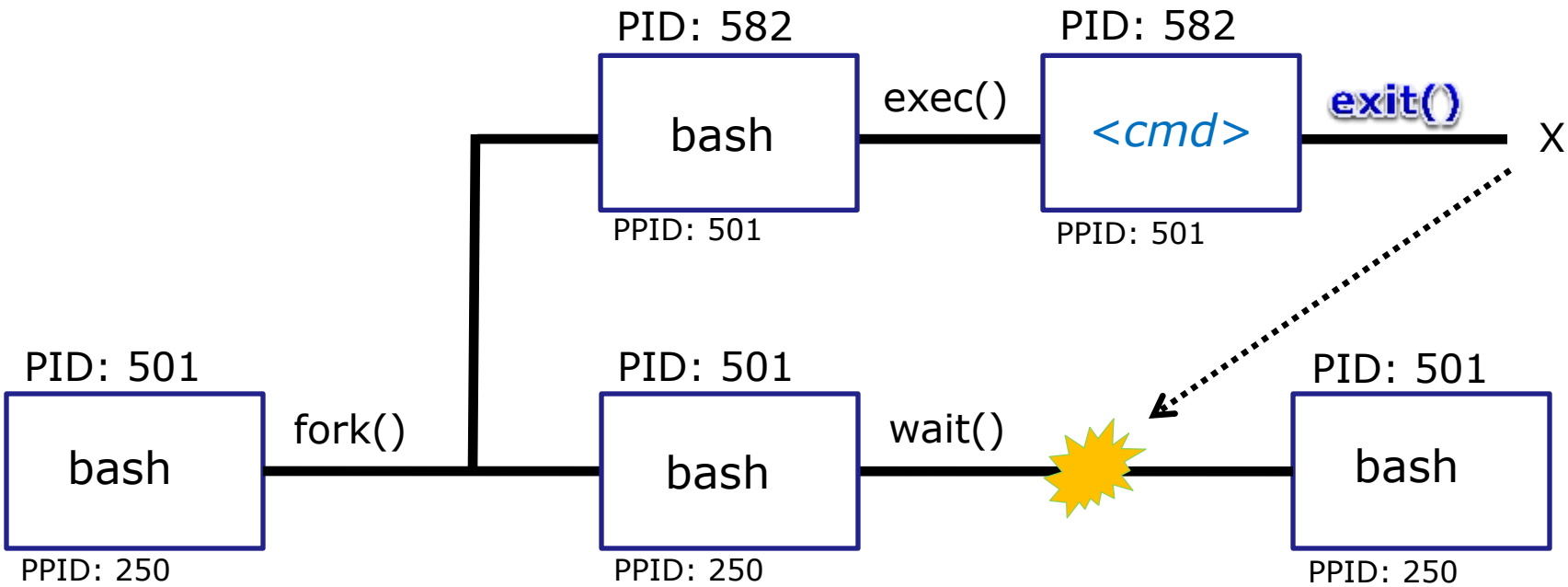

3) The final step is to terminate the new child process after it has finished

- When the **child** process finishes executing the instructions it issues the **exit** system call. At this point it gives up all its resources and becomes a **zombie**.
- The **parent** is woken up. Once the **parent** has informed the kernel it has finished working with the **child**, the **child** process is killed and removed from the process table.

Process Lifecycle

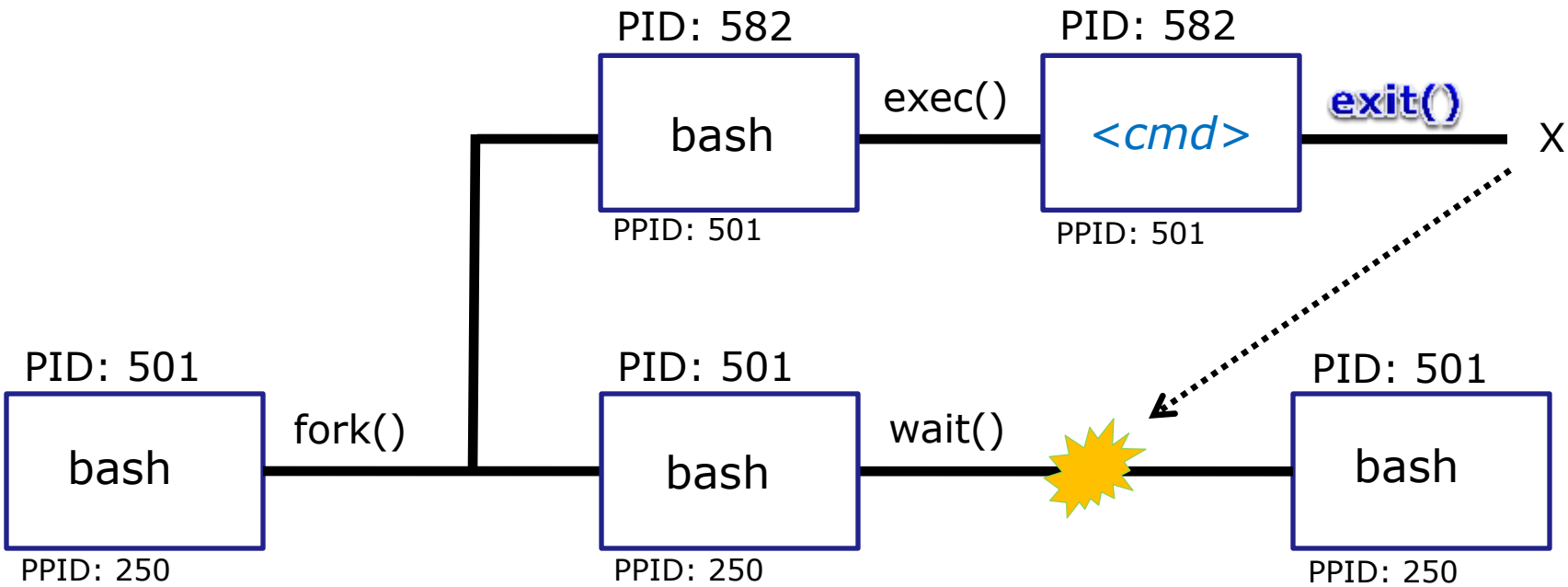

*Note: If the **parent** process were to die before the **child**, the zombie will become an **orphan**.*

*Fortunately the init process will adopt any orphaned **zombies!***

Process Information

ps command

Tools for your toolbox

ps - report a snapshot of the current processes

ps command

Basic syntax
(see man page for the rest of the story)

ps <*options*>

Examples

ps *(shows your shell and ps processes in current session)*

ps -a *(show all processes you are running on all sessions)*

ps -u simben90 *(shows sshd, shell and current processes all login sessions)*

ps -l *(shows your shell and ps processes using long format*

ps -ef *(shows every process on system using full format)*

Column Header	Description
PID	Process Identification Number, a unique number identifying the process
PPID	Parent PID, the PID of the parent process (like .. in the file hierarchy)
UID	The user running the process
TTY	The terminal that the process's stdin and stdout are connected to
S	The status (state) of the process: S=Sleeping, R=Running, T=Stopped, Z=Zombie, D=uniterruptable sleep (usually IO)
PRI	Process priority
SZ	Process size in pages
CMD	The name of the process (the command being run)
C	The CPU utilization of the process
WCHAN	Waiting channel (name of kernel function in which the process is sleeping)
F	Flags (1=forked but didn't exit, 4=used superuser privileges)
TIME	Cumulative CPU time
NI	Nice value

Column headers on ps command output

Just a few of the types of information kept on a process.

*Use **man ps** to see a lot more.*

ps command

```
/home/cis90/simben $ ps
  PID TTY          TIME CMD
11424 pts/3    00:00:00 bash
12006 pts/3    00:00:00 ps
```

With no options it shows my shell and ps processes for the terminal device I'm using

/dev/pts/3

/dev/pts/2

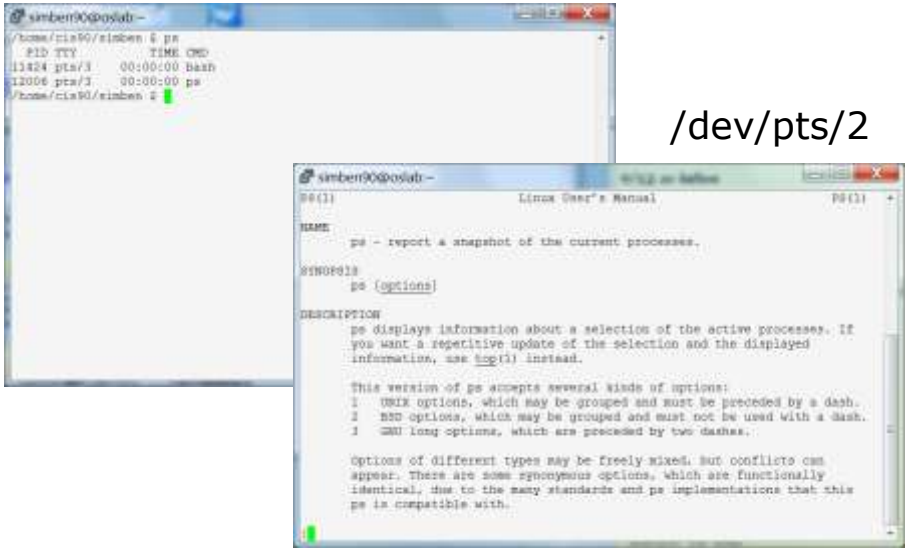

PID	Process Identification Number, a unique number identifying the process
TTY	The terminal that the process's stdin and stdout are connected to
CMD	The name of the process (the command being run)
TIME	Cumulative CPU time

ps command with **-a** option

```
/home/cis90/simben $ ps -a
  PID TTY          TIME CMD
12098 pts/2    00:00:00 man
12101 pts/2    00:00:00 sh
12102 pts/2    00:00:00 sh
12106 pts/2    00:00:00 less
12139 pts/3    00:00:00 ps
/home/cis90/simben $
```

/dev/pts/3

/dev/pts/2

The -a option shows all processes being run by all users (does not include shell or sshd processes)

PID	Process Identification Number, a unique number identifying the process
TTY	The terminal that the process's stdin and stdout are connected to
CMD	The name of the process (the command being run)
TIME	Cumulative CPU time

ps command with **-u** option

```
/home/cis90/simben $ ps -u simben90
  PID TTY          TIME CMD
11343 ?        00:00:00 sshd
11344 pts/2    00:00:00 bash
11423 ?        00:00:00 sshd
11424 pts/3    00:00:00 bash
12098 pts/2    00:00:00 man
12101 pts/2    00:00:00 sh
12102 pts/2    00:00:00 sh
12106 pts/2    00:00:00 less
12324 pts/3    00:00:00 ps
/home/cis90/simben $
```

/dev/pts/3

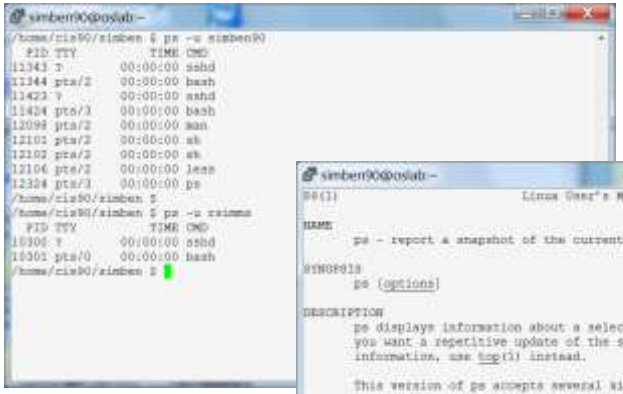

/dev/pts/2

*Use the **-u** (user) option to look at processes owned by a specific user (includes shell and sshd processes)*

PID	Process Identification Number, a unique number identifying the process
TTY	The terminal that the process's stdin and stdout are connected to
CMD	The name of the process (the command being run)
TIME	Cumulative CPU time

ps command with **-l** option

*Use **-l** (long format) to show additional process information*

11424 is sleeping
12438 is running

```
/home/cis90/simben $ ps -l
F S   UID   PID  PPID  C PRI  NI ADDR SZ WCHAN  TTY          TIME CMD
0 S  1201 11424 11423  0  80   0 -  1315 -      pts/3    00:00:00 bash
0 R  1201 12438 11424  0  80   0 -  1220 -      pts/3    00:00:00 ps
```

Parent Process ID

Process ID

User ID

Running or sleeping

Size of process in 1K blocks

UID	The user running the process
S	The status of the process: S=Sleeping, R=Running, T=Stopped, Z=Zombie, D=uniterruptable sleep (usually IO)
PRI	Process priority
C	The CPU utilization of the process
WCHAN	Waiting channel (name of kernel function in which the process is sleeping)
F	Flags (1=forked but didn't exit, 4=used superuser privileges)
TIME	Cumulative CPU time
NI	Nice value

Deep Dive View of **ps -l** command

*Running the **ps -l** command from **bash***

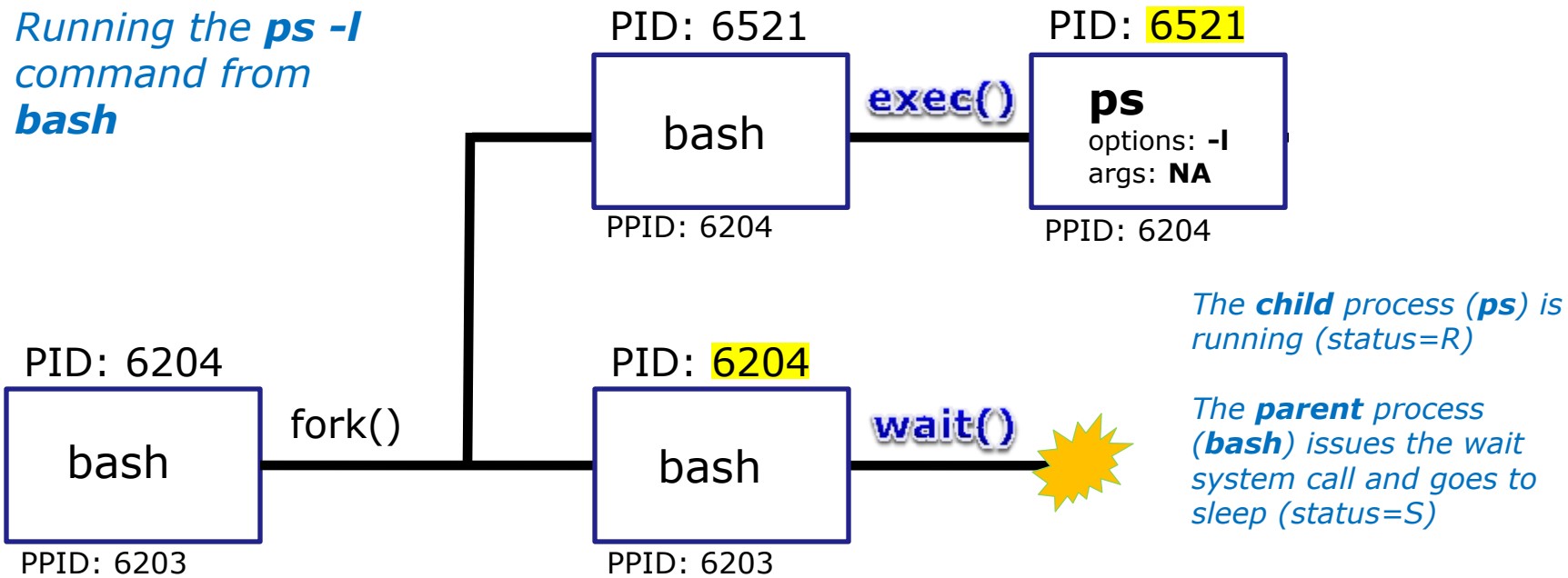

6204 is sleeping
6521 is running

```
[rsimms@opus ~]$ ps -l
F S   UID   PID  PPID  C PRI  NI ADDR SZ WCHAN  TTY          TIME CMD
0 S   201  6204  6203  0  75   0 -  1165 wait   pts/6    00:00:00 bash
0 R   201  6521  6204  0  77   0 -  1050 -      pts/6    00:00:00 ps
```

An **exec** system call is issued to overlay the **child** process with the instructions of the requested command. The new instructions then are executed.

ps command with **-ef** options (page 1)

```
/home/cis90/simben $ ps -ef
UID        PID  PPID  C STIME TTY          TIME CMD
root         1     0  0 Aug27 ?        00:00:36 /sbin/init
root         2     0  0 Aug27 ?        00:00:00 [kthreadd]
root         3     2  0 Aug27 ?        00:00:14 [migration/0]
root         4     2  0 Aug27 ?        00:00:04 [ksoftirqd/0]
root         5     2  0 Aug27 ?        00:00:00 [migration/0]
root         6     2  0 Aug27 ?        00:00:35 [watchdog/0]
root         7     2  0 Aug27 ?        00:00:10 [migration/1]
root         8     2  0 Aug27 ?        00:00:00 [migration/1]
root         9     2  0 Aug27 ?        00:00:18 [ksoftirqd/1]
root        10     2  0 Aug27 ?        00:00:30 [watchdog/1]
root        11     2  0 Aug27 ?        00:00:10 [migration/2]
root        12     2  0 Aug27 ?        00:00:00 [migration/2]
root        13     2  0 Aug27 ?        00:00:07 [ksoftirqd/2]
root        14     2  0 Aug27 ?        00:00:30 [watchdog/2]
root        15     2  0 Aug27 ?        00:00:12 [migration/3]
root        16     2  0 Aug27 ?        00:00:00 [migration/3]
root        17     2  0 Aug27 ?        00:00:10 [ksoftirqd/3]
root        18     2  0 Aug27 ?        00:00:30 [watchdog/3]
root        19     2  0 Aug27 ?        00:03:37 [events/0]
root        20     2  0 Aug27 ?        00:04:37 [events/1]
root        21     2  0 Aug27 ?        00:03:50 [events/2]
root        22     2  0 Aug27 ?        00:04:42 [events/3]
root        23     2  0 Aug27 ?        00:00:00 [cgroup]
root        24     2  0 Aug27 ?        00:00:00 [khelper]
```

*Use **-ef** option to see everything with full format*

ps command with **-ef** options (page 2)

```
root         25     2  0 Aug27 ?        00:00:00 [netns]
root         26     2  0 Aug27 ?        00:00:00 [async/mgr]
root         27     2  0 Aug27 ?        00:00:00 [pm]
root         28     2  0 Aug27 ?        00:00:28 [sync_supers]
root         29     2  0 Aug27 ?        00:00:31 [bdi-default]
root         30     2  0 Aug27 ?        00:00:00 [kintegrityd/0]
root         31     2  0 Aug27 ?        00:00:00 [kintegrityd/1]
root         32     2  0 Aug27 ?        00:00:00 [kintegrityd/2]
root         33     2  0 Aug27 ?        00:00:00 [kintegrityd/3]
root         34     2  0 Aug27 ?        00:01:18 [kblockd/0]
root         35     2  0 Aug27 ?        00:00:17 [kblockd/1]
root         36     2  0 Aug27 ?        00:00:22 [kblockd/2]
root         37     2  0 Aug27 ?        00:00:33 [kblockd/3]
root         38     2  0 Aug27 ?        00:00:00 [kacpid]
root         39     2  0 Aug27 ?        00:00:00 [kacpi_notify]
root         40     2  0 Aug27 ?        00:00:00 [kacpi_hotplug]
root         41     2  0 Aug27 ?        00:00:00 [ata_aux]
root         42     2  0 Aug27 ?        00:00:00 [ata_sff/0]
root         43     2  0 Aug27 ?        00:00:00 [ata_sff/1]
root         44     2  0 Aug27 ?        00:00:00 [ata_sff/2]
root         45     2  0 Aug27 ?        00:00:00 [ata_sff/3]
root         46     2  0 Aug27 ?        00:00:00 [ksuspend_usbd]
root         47     2  0 Aug27 ?        00:00:00 [khubd]
root         48     2  0 Aug27 ?        00:00:00 [kseriod]
root         49     2  0 Aug27 ?        00:00:00 [md/0]
root         50     2  0 Aug27 ?        00:00:00 [md/1]
root         51     2  0 Aug27 ?        00:00:00 [md/2]
root         52     2  0 Aug27 ?        00:00:00 [md/3]
```

ps command with **-ef** options (page 3)

```
root      2534     1  0 Sep10 ?        00:00:00 ./hpiod
root      2539     1  0 Sep10 ?        00:00:00 python ./hpssd.py
root      2556     1  0 Sep10 ?        00:00:00 cupsd
root      2575     1  0 Sep10 ?        00:00:11 /usr/sbin/sshd
root      2600     1  0 Sep10 ?        00:00:01 sendmail: accepting connections
smmsp     2609     1  0 Sep10 ?        00:00:00 sendmail: Queue runner@01:00:00 for
root      2626     1  0 Sep10 ?        00:00:00 crond
xfs       2662     1  0 Sep10 ?        00:00:00 xfs -droppriv -daemon
root      2693     1  0 Sep10 ?        00:00:00 /usr/sbin/atd
root      2710     1  0 Sep10 ?        00:00:00 rhnsd --interval 240
root      2743     1  0 Sep10 ?        00:01:33 /usr/bin/python -tt /usr/sbin/yum-up
root      2745     1  0 Sep10 ?        00:00:00 /usr/libexec/gam_server
root      2749     1  0 Sep10 ?        00:00:00 /usr/bin/vmnet-netifup -d /var/run/v
root      2758     1  0 Sep10 ?        00:00:00 /usr/bin/vmnet-netifup -d /var/run/v
root      2768     1  0 Sep10 ?        00:00:00 /usr/bin/vmnet-netifup -d /var/run/v
root      2827     1  0 Sep10 ?        00:00:00 /usr/bin/vmnet-dhcpd -cf /etc/vmware
root      2858     1  0 Sep10 ?        00:00:00 /usr/bin/vmnet-dhcpd -cf /etc/vmware
root      2859     1  0 Sep10 ?        00:00:00 /usr/bin/vmnet-dhcpd -cf /etc/vmware
68        2875     1  0 Sep10 ?        00:00:01 hald
root      2876  2875  0 Sep10 ?        00:00:00 hald-runner
68        2883  2876  0 Sep10 ?        00:00:00 hald-addon-acpi: listening on acpid
68        2886  2876  0 Sep10 ?        00:00:00 hald-addon-keyboard: listening on /d
68        2890  2876  0 Sep10 ?        00:00:00 hald-addon-keyboard: listening on /d
root      2898  2876  0 Sep10 ?        00:02:46 hald-addon-storage: polling /dev/hda
root      2944     1  0 Sep10 ?        00:00:00 /usr/sbin/smartd -q never
root      2949     1  0 Sep10 tty2     00:00:00 /sbin/mingetty tty2
```

ps command with **-ef** options (page 4)

```
root        53     2  0 Aug27 ?        00:00:00 [md_misc/0]
root        54     2  0 Aug27 ?        00:00:00 [md_misc/1]
root        55     2  0 Aug27 ?        00:00:00 [md_misc/2]
root        56     2  0 Aug27 ?        00:00:00 [md_misc/3]
root        57     2  0 Aug27 ?        00:00:00 [linkwatch]
root        58     2  0 Aug27 ?        00:00:02 [khungtaskd]
root        59     2  0 Aug27 ?        00:00:03 [kswapd0]
root        60     2  0 Aug27 ?        00:00:00 [ksmd]
root        61     2  0 Aug27 ?        00:00:00 [aio/0]
root        62     2  0 Aug27 ?        00:00:00 [aio/1]
root        63     2  0 Aug27 ?        00:00:00 [aio/2]
root        64     2  0 Aug27 ?        00:00:00 [aio/3]
root        65     2  0 Aug27 ?        00:00:00 [crypto/0]
root        66     2  0 Aug27 ?        00:00:00 [crypto/1]
root        67     2  0 Aug27 ?        00:00:00 [crypto/2]
root        68     2  0 Aug27 ?        00:00:00 [crypto/3]
root        73     2  0 Aug27 ?        00:00:00 [kthrotld/0]
root        74     2  0 Aug27 ?        00:00:00 [kthrotld/1]
root        75     2  0 Aug27 ?        00:00:00 [kthrotld/2]
root        76     2  0 Aug27 ?        00:00:00 [kthrotld/3]
root        77     2  0 Aug27 ?        00:00:00 [pciehpd]
root        79     2  0 Aug27 ?        00:00:00 [kpsmoused]
root        80     2  0 Aug27 ?        00:00:00 [usbhid_resumer]
root       110     2  0 Aug27 ?        00:00:00 [kstriped]
root       194     2  0 Aug27 ?        00:00:00 [scsi_eh_0]
root       195     2  0 Aug27 ?        00:00:00 [scsi_eh_1]
root       209     2  0 Aug27 ?        00:00:00 [scsi_eh_2]
```

ps command with **-ef** options (page 5)

```
root       210     2  0 Aug27 ?        00:00:00 [vmw_pvscsi_wq_2]
root       321     2  0 Aug27 ?        00:00:19 [jbd2/sda1-8]
root       322     2  0 Aug27 ?        00:00:00 [ext4-dio-unwrit]
root       414     1  0 Aug27 ?        00:00:00 /sbin/udevd -d
root       530     2  0 Aug27 ?        00:02:17 [vmmemctl]
root       776     2  0 Aug27 ?        00:00:29 [jbd2/sda5-8]
root       777     2  0 Aug27 ?        00:00:00 [ext4-dio-unwrit]
root       778     2  0 Aug27 ?        00:05:28 [jbd2/sda3-8]
root       779     2  0 Aug27 ?        00:00:00 [ext4-dio-unwrit]
root       822     2  0 Aug27 ?        00:00:43 [kauditd]
root      1457     1  0 Aug27 ?        00:02:13 auditd
root      1475     1  0 Aug27 ?        00:00:00 /sbin/portreserve
root      1482     1  0 Aug27 ?        00:00:45 /sbin/rsyslogd -i /var/run/syslo
root      1511     1  0 Aug27 ?        00:28:03 irqbalance --pid=/var/run/irqbal
rpc       1525     1  0 Aug27 ?        00:00:09 rpcbind
rpcuser   1543     1  0 Aug27 ?        00:00:00 rpc.statd
root      1555     1  0 Aug27 ?        00:00:12 mdadm --monitor --scan -f --pid-
dbus      1681     1  0 Aug27 ?        00:00:07 dbus-daemon --system
root      1698     1  0 Aug27 ?        00:00:42 cupsd -C /etc/cups/cupsd.conf
root      1723     1  0 Aug27 ?        00:00:00 /usr/sbin/acpid
68        1732     1  0 Aug27 ?        00:00:42 hald
root      1733  1732  0 Aug27 ?        00:00:00 hald-runner
root      1765  1733  0 Aug27 ?        00:00:00 hald-addon-input: Listening on /
68        1773  1733  0 Aug27 ?        00:00:00 hald-addon-acpi: listening on ac
root      1800     1  0 Aug27 ?        00:02:50 automount --pid-file /var/run/au
root      1863     1  0 Aug27 ?        00:00:00 /bin/sh /usr/bin/mysqld_safe --d
mysql     1965  1863  0 Aug27 ?        01:42:39 /usr/libexec/mysqld --basedir=/u
```

ps command with **-ef** options (page 6)

```
root      1997     1  0 Aug27 ?        00:03:33 sendmail: accepting connections
smmsp     2006     1  0 Aug27 ?        00:00:01 sendmail: Queue runner@01:00:00
root      2028     1  0 Aug27 ?        00:00:00 abrt-dump-oops -d /var/spool/abr
root      2036     1  0 Aug27 ?        00:04:06 /usr/sbin/httpd
root      2044     1  0 Aug27 ?        00:02:17 crond
root      2055     1  0 Aug27 ?        00:00:02 /usr/sbin/atd
root      2076     1  0 Aug27 tty1     00:00:00 /sbin/mingetty /dev/tty1
root      2078     1  0 Aug27 tty2     00:00:00 /sbin/mingetty /dev/tty2
root      2080     1  0 Aug27 tty3     00:00:00 /sbin/mingetty /dev/tty3
root      2082     1  0 Aug27 tty4     00:00:00 /sbin/mingetty /dev/tty4
root      2088     1  0 Aug27 tty5     00:00:00 /sbin/mingetty /dev/tty5
root      2090     1  0 Aug27 tty6     00:00:00 /sbin/mingetty /dev/tty6
apache    3716  2036  0 Nov02 ?        00:01:22 /usr/sbin/httpd
apache    5550  2036  0 Nov02 ?        00:01:15 /usr/sbin/httpd
apache    5551  2036  0 Nov02 ?        00:01:20 /usr/sbin/httpd
apache    5552  2036  0 Nov02 ?        00:01:17 /usr/sbin/httpd
apache    5554  2036  0 Nov02 ?        00:01:16 /usr/sbin/httpd
apache    6611  2036  0 Nov02 ?        00:01:18 /usr/sbin/httpd
root     10295 18067  0 07:28 ?        00:00:00 sshd: rsimms [priv]
rsimms   10300 10295  0 07:28 ?        00:00:00 sshd: rsimms@pts/0
rsimms   10301 10300  0 07:28 pts/0    00:00:00 -bash
apache   10326  2036  0 Nov02 ?        00:01:07 /usr/sbin/httpd
root     11088 18067  0 08:06 ?        00:00:00 sshd: lamnav90 [priv]
lamnav90 11092 11088  0 08:06 ?        00:00:01 sshd: lamnav90@pts/1
lamnav90 11093 11092  0 08:06 pts/1    00:00:00 -bash
root     11336 18067  0 08:12 ?        00:00:00 sshd: simben90 [priv]
simben90 11343 11336  0 08:12 ?        00:00:00 sshd: simben90@pts/2
simben90 11344 11343  0 08:12 pts/2    00:00:00 -bash
```

ps command with **-ef** options (page 6)

```
root     11415 18067  0 08:13 ?        00:00:00 sshd: simben90 [priv]
simben90 11423 11415  0 08:13 ?        00:00:00 sshd: simben90@pts/3
simben90 11424 11423  0 08:13 pts/3    00:00:00 -bash
root     11767     2  0 Sep17 ?        00:00:00 [rpciod/0]
root     11768     2  0 Sep17 ?        00:00:00 [rpciod/1]
root     11769     2  0 Sep17 ?        00:00:00 [rpciod/2]
root     11770     2  0 Sep17 ?        00:00:00 [rpciod/3]
root     11772     2  0 Sep17 ?        00:00:00 [kslowd000]
root     11773     2  0 Sep17 ?        00:00:00 [kslowd001]
root     11774     2  0 Sep17 ?        00:00:00 [nfsiod]
lamnav90 12591 11093  0 08:57 pts/1    00:00:00 ssh sun-hwa-p2
root     12613     2  0 Sep08 ?        00:05:57 [flush-8:0]
simben90 12684 11344  0 08:59 pts/2    00:00:00 ssh sun-hwa-p2
root     12824 18067  0 09:05 ?        00:00:00 sshd: smimat90 [priv]
smimat90 12845 12824  0 09:06 ?        00:00:00 sshd: smimat90@pts/4
smimat90 12846 12845  0 09:06 pts/4    00:00:00 -bash
root     12875 18067  0 09:06 ?        00:00:00 sshd: pikann90 [priv]
pikann90 12879 12875  0 09:06 ?        00:00:00 sshd: pikann90@pts/5
pikann90 12880 12879  0 09:06 pts/5    00:00:00 -bash
root     12906 18067  0 09:06 ?        00:00:00 sshd: pikann90 [priv]
pikann90 12925 12906  0 09:07 ?        00:00:00 sshd: pikann90@pts/6
pikann90 12926 12925  0 09:07 pts/6    00:00:00 -bash
pikann90 12957 12926  0 09:07 pts/6    00:00:00 ssh sun-hwa-p2
root     13008 18067  0 09:09 ?        00:00:00 sshd: smimat90 [priv]
smimat90 13013 13008  0 09:10 ?        00:00:00 sshd: smimat90@pts/7
smimat90 13014 13013  0 09:10 pts/7    00:00:00 -bash
root     13330 18067  0 09:20 ?        00:00:00 sshd: quifra90 [priv]
```

ps command with **-ef** options (page 7)

```
quifra90 13355 13330  0 09:21 ?        00:00:00 sshd: quifra90@pts/8
quifra90 13356 13355  0 09:21 pts/8    00:00:00 -bash
apache   13456  2036  0 09:24 ?        00:00:00 /usr/sbin/httpd
apache   13458  2036  0 09:24 ?        00:00:00 /usr/sbin/httpd
apache   13459  2036  0 09:24 ?        00:00:00 /usr/sbin/httpd
smimat90 13548 13014  0 09:28 pts/7    00:00:00 man grep
smimat90 13551 13548  0 09:28 pts/7    00:00:00 sh -c (cd "/usr/share/man" && (e
smimat90 13552 13551  0 09:28 pts/7    00:00:00 sh -c (cd "/usr/share/man" && (e
smimat90 13557 13552  0 09:28 pts/7    00:00:00 /usr/bin/less -is
simben90 13640 11424  0 09:30 pts/3    00:00:00 ps -ef
tinsam90 14869     1  0 Sep09 ?        00:00:00 SCREEN
tinsam90 14870 14869  0 Sep09 pts/20   00:00:00 /bin/bash
tinsam90 14886 14869  0 Sep09 pts/21   00:00:00 /bin/bash
tinsam90 14932 14869  0 Sep09 pts/23   00:00:00 /bin/bash
root     15152   414  0 Sep30 ?        00:00:00 /sbin/udevd -d
root     15153   414  0 Sep30 ?        00:00:00 /sbin/udevd -d
root     18067     1  0 Sep25 ?        00:00:04 /usr/sbin/sshd
root     18962     2  0 Sep09 ?        00:00:00 [bluetooth]
ntp      25613     1  0 Sep29 ?        00:00:16 ntpd -u ntp:ntp -p /var/run/ntpd
apache   32671  2036  0 Nov02 ?        00:01:37 /usr/sbin/httpd
apache   32674  2036  0 Nov02 ?        00:01:34 /usr/sbin/httpd
apache   32675  2036  0 Nov02 ?        00:01:35 /usr/sbin/httpd
apache   32676  2036  0 Nov02 ?        00:01:34 /usr/sbin/httpd
apache   32677  2036  0 Nov02 ?        00:01:35 /usr/sbin/httpd
apache   32678  2036  0 Nov02 ?        00:01:33 /usr/sbin/httpd
apache   32679  2036  0 Nov02 ?        00:01:34 /usr/sbin/httpd
apache   32680  2036  0 Nov02 ?        00:01:36 /usr/sbin/httpd
```

Job Control

```
find / -user simben90 2> /dev/null
```

Some commands, like the one we used in Lab 7, take a long time to complete. Until it finishes you can't type any more commands!

It is running in the ***foreground***

Job Control
A feature of the bash shell

Foreground processes
- Processes that receive their input and write their output to the terminal.
- The parent shell waits on these processes to die.

Background Processes
- Processes that do not get their input from a user keyboard.
- The parent shell does not wait on these processes; it re-prompts the user for next command.

Job Control
A feature of the bash shell

*When a process is **running** the user can **stop** it and choose whether it runs in the **background** or **foreground***

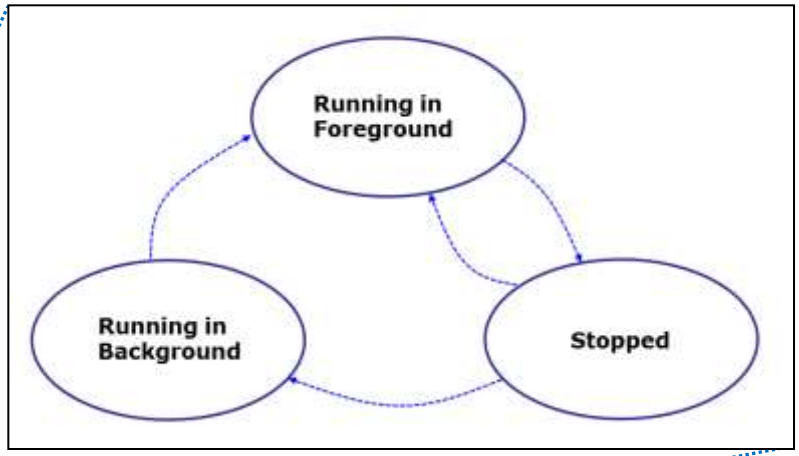

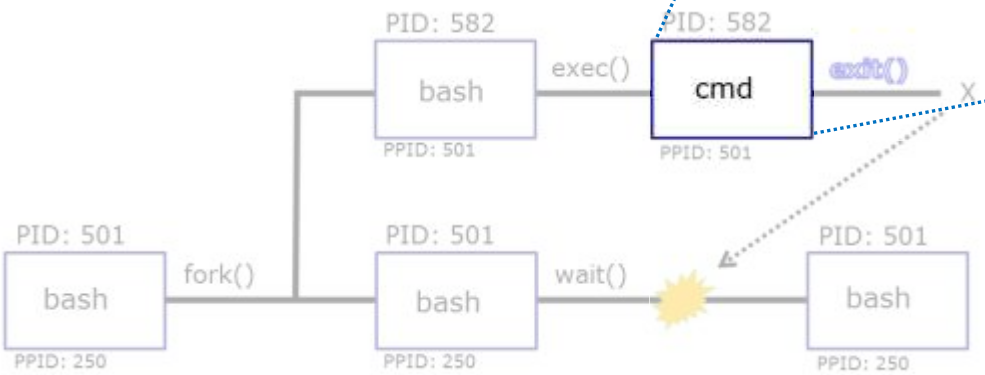

Job Control

A feature of the bash shell

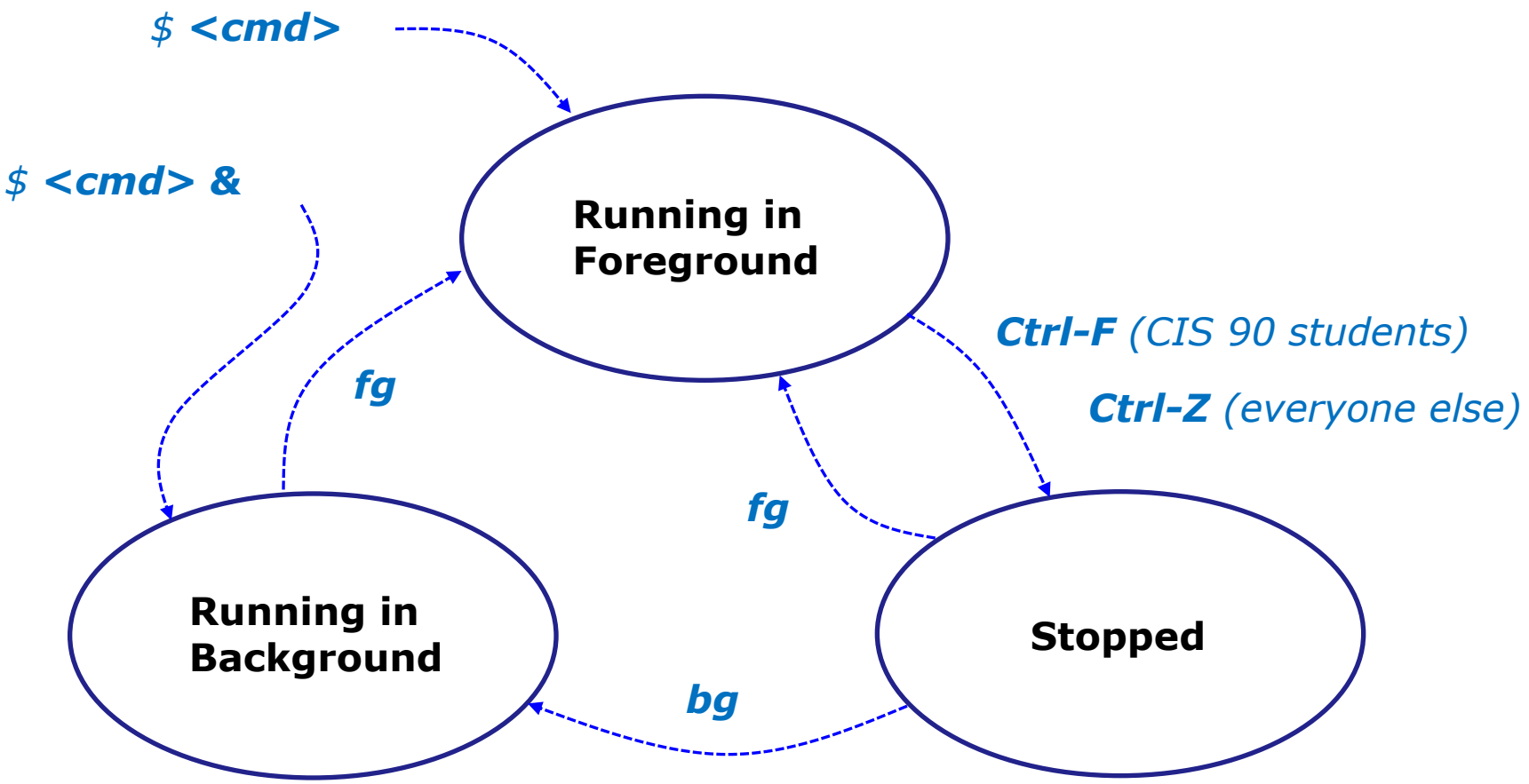

*Use the **jobs** command to view stopped and background jobs*

Job Control
Suspending and Resuming

Ctrl-F

- Stops (suspends) a foreground process by sending it a "TTY Stop" (SIGTSTP) signal

Note, CIS 90 students will be using Ctrl-F which has been configured in their shell environment. Normally Ctrl-Z is used.

bg

- resumes the currently suspended process and runs it in the background

Job Control
Keyboard customization for CIS 90

Ctrl-Z or **Ctrl-F**

- To send a SIGTSTP signal from the keyboard
- Stops (suspends) a foreground process

```
/home/cis90/simben $ stty -a
speed 38400 baud; rows 26; columns 78; line = 0;
intr = ^C; quit = ^\; erase = ^?; kill = ^U; eof = ^D; eol = <undef>;
eol2 = <undef>; swtch = <undef>; start = ^Q; stop = ^S; susp = ^F; rprnt = ^R;
werase = ^W; lnext = ^V; flush = ^O; min = 1; time = 0;
```

*CIS 90 accounts use **Ctrl-F***

```
[rsimms@opus ~]$ stty -a
speed 38400 baud; rows 39; columns 84; line = 0;
intr = ^C; quit = ^\; erase = ^?; kill = ^U; eof = ^D; eol = <undef>; eol2 = <undef>;
swtch = <undef>; start = ^Q; stop = ^S; susp = ^Z; rprnt = ^R; werase = ^W;
lnext = ^V; flush = ^O; min = 1; time = 0;
```

*Other Opus accounts use **Ctrl-Z***

The bash shell environment for the CIS 90 accounts was customized to use a different keystroke for sending a SIGTSTP signal

Example - suspending a **find** command

$ **find / -name "stage[12]" 2> /dev/null**

Suspend a long find command, then resume it in the background

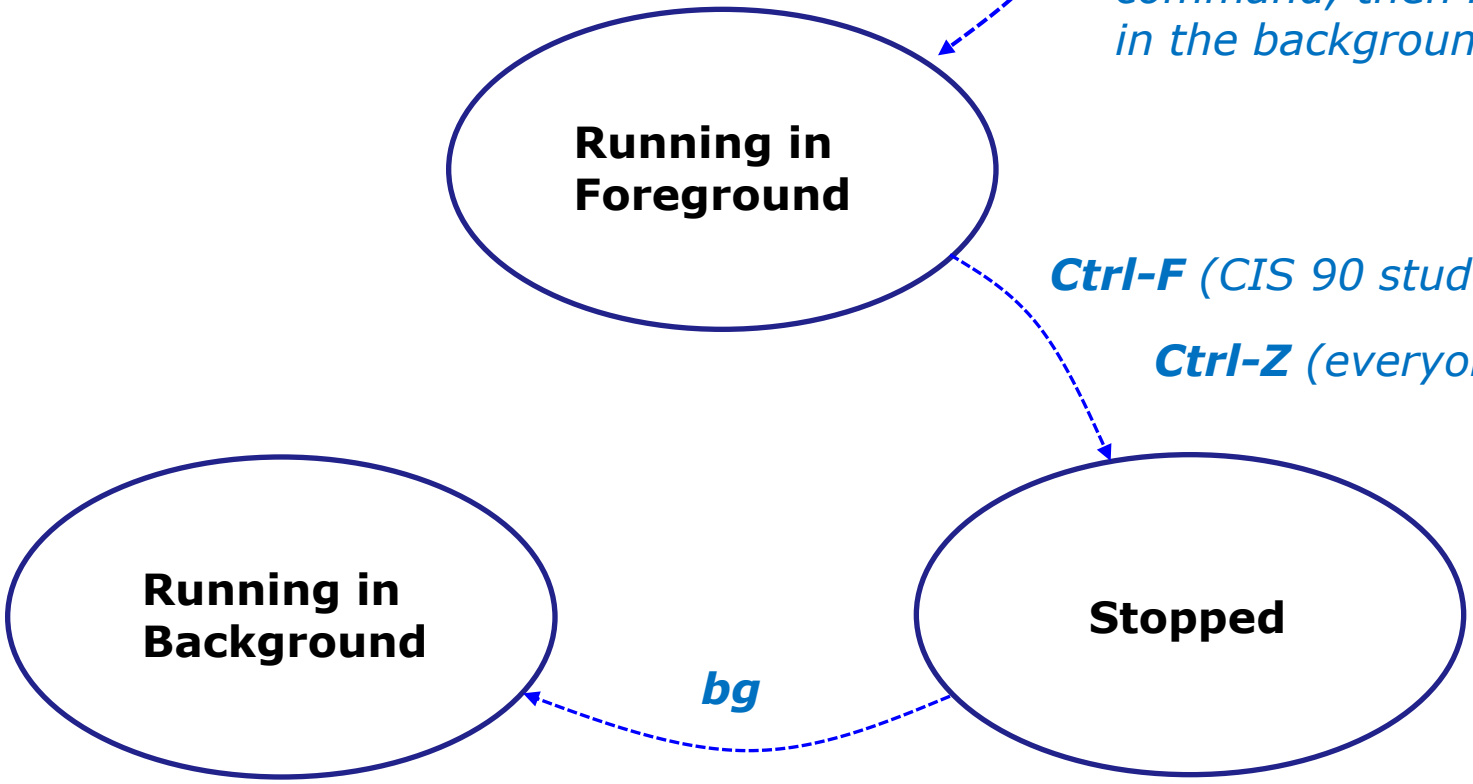

Example - suspending a **find** command

```
/home/cis90/simben $ find / -name "stage[12]"  2> /dev/null
/home/cis90/bownic/bin/stage1
/home/cis90/bownic/bin/stage2
/home/cis90/zemric/stage1
/home/cis90/zemric/stage2
/home/cis90/boyjef/bin/stage1
/home/cis90/boyjef/bin/stage2
/home/cis90/porrya/bin/stage1
/home/cis90/porrya/bin/stage2
/home/cis90/isoric/stage1
/home/cis90/isoric/stage2
^F
[1]+  Stopped                 find / -name "stage[12]" 2> /dev/null
/home/cis90/simben $
```

Ctrl-F *(CIS 90 accounts) or* ***Ctrl-Z*** *(other accounts) is tapped to suspend the find command*

Notice, we can type more commands again after the find command was stopped

In the same session we can monitor the find process

Process ID 25907 (find) is stopped (status =T)

```
/home/cis90/simben $ ps -l
F S   UID   PID  PPID  C PRI  NI ADDR SZ WCHAN  TTY          TIME CMD
0 S  1201 11344 11343  0  80   0 -  1315 -      pts/2    00:00:00 bash
0 T  1201 25907 11344  4  80   0 -  1219 -      pts/2    00:00:00 find
0 R  1201 25925 11344  0  80   0 -  1219 -      pts/2    00:00:00 ps
/home/cis90/simben $
```

Example - suspending a **find** command

```
/home/cis90/simben $ bg
[1]+ find / -name "stage[12]" 2> /dev/null &
/home/cis90/simben $ /usr/share/grub/i386-redhat/stage1
/usr/share/grub/i386-redhat/stage2
/boot/grub/stage1
/boot/grub/stage2

[1]+  Exit 1                  find / -name "stage[12]" 2> /dev/null
/home/cis90/simben $
```

bg *resumes the find command in the background*

Notice, we can't type more commands again in this session until the find command finishes

In a different session we can monitor the find process

Process ID 25907 (find) is running (status=R)

```
/home/cis90/simben $ ps -l -u simben90
F S   UID   PID  PPID  C PRI  NI ADDR SZ WCHAN  TTY          TIME CMD
5 S  1201 11343 11336  0  80   0 -  3010 ?      ?        00:00:01 sshd
0 S  1201 11344 11343  0  80   0 -  1315 -      pts/2    00:00:00 bash
5 R  1201 11423 11415  0  80   0 -  3200 ?      ?        00:00:01 sshd
0 S  1201 11424 11423  0  80   0 -  1315 -      pts/3    00:00:00 bash
0 R  1201 25907 11344  0  80   0 -  1186 -      pts/2    00:00:01 find
0 R  1201 25956 11424  0  80   0 -  1234 -      pts/3    00:00:00 ps
/home/cis90/simben $
```

Job Control

Example - suspending a **sleep** command

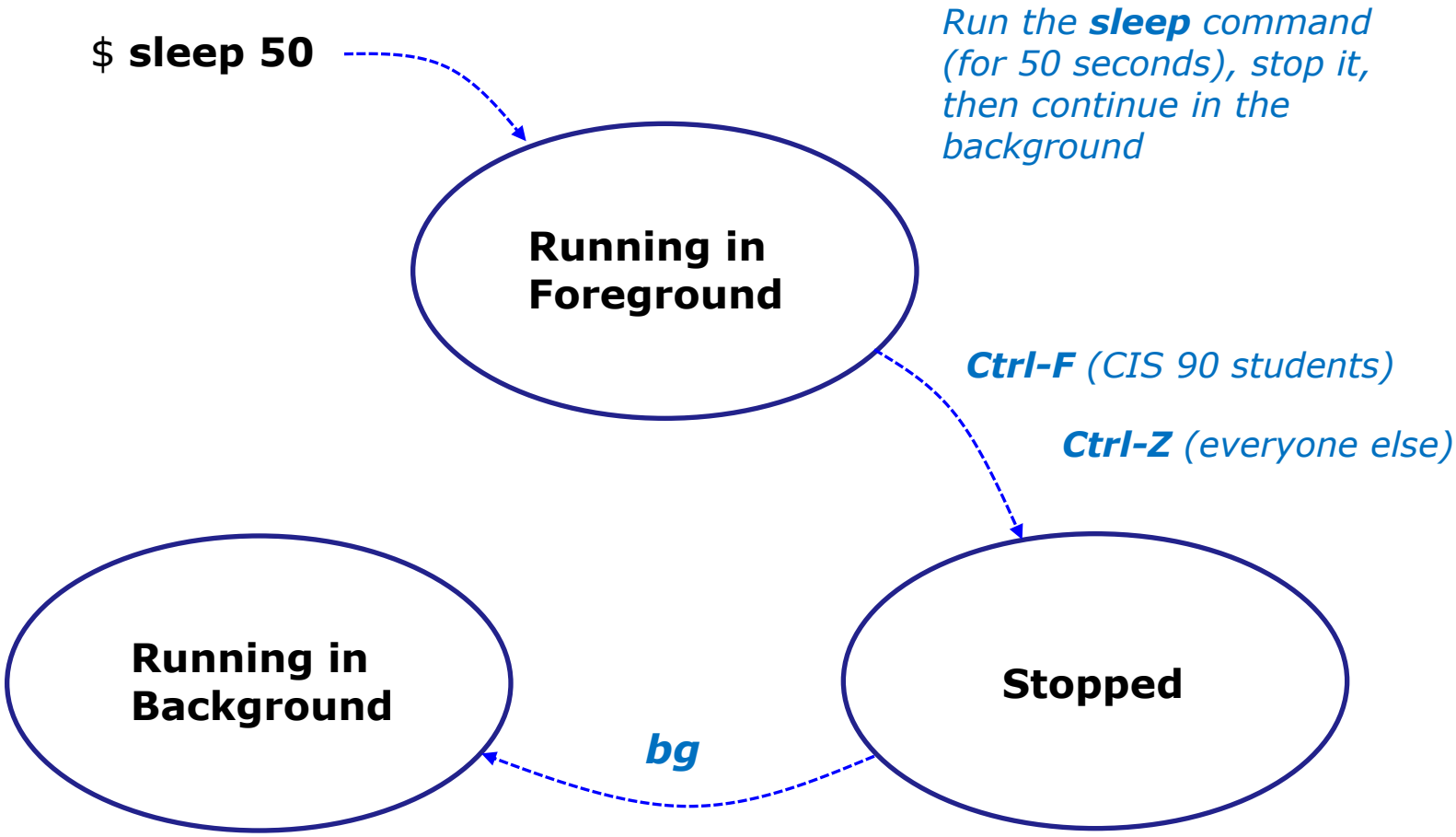

Job Control

Example - suspending a **sleep** command

```
[rsimms@opus ~]$ sleep 50

[1]+  Stopped                 sleep 50
[rsimms@opus ~]$
```

Ctrl-F *(CIS 90 accounts) or* ***Ctrl-Z*** *(other accounts) is tapped while sleep is running*

PID 25389 (sleep) is stopped

```
[rsimms@opus ~]$ ps -l  -u rsimms
F S   UID   PID  PPID  C PRI  NI ADDR SZ WCHAN  TTY          TIME CMD
5 S   201 25055 25044  0  75   0 -  2481 stext  ?        00:00:00 sshd
0 S   201 25056 25055  0  76   0 -  1168 -      pts/3    00:00:00 bash
5 S   201 25087 25084  0  75   0 -  2481 stext  ?        00:00:00 sshd
0 S   201 25088 25087  0  75   0 -  1168 wait   pts/4    00:00:00 bash
0 T   201 25389 25056  0  76   0 -   929 finish pts/3    00:00:00 sleep
0 R   201 25391 25088  0  77   0 -  1065 -      pts/4    00:00:00 ps
```

Job Control

Example - suspending a **sleep** command

```
[rsimms@opus ~]$ bg
[1]+ sleep 50 &
```

bg *resumes the sleep command and it finishes*

PID 25389 is sleeping and no longer stopped (status=S)

```
[rsimms@opus ~]$ ps -l  -u rsimms
F S   UID   PID  PPID  C PRI  NI ADDR SZ WCHAN  TTY          TIME CMD
5 S   201 25055 25044  0  75   0 -  2481 stext  ?        00:00:00 sshd
0 S   201 25056 25055  0  75   0 -  1168 -      pts/3    00:00:00 bash
5 R   201 25087 25084  0  81   0 -  2481 stext  ?        00:00:00 sshd
0 S   201 25088 25087  0  75   0 -  1168 wait   pts/4    00:00:00 bash
0 S   201 25389 25056  0  75   0 -   929 322807 pts/3    00:00:00 sleep
0 R   201 25394 25088  0  77   0 -  1065 -      pts/4    00:00:00 ps
[rsimms@opus ~]$
```

Job Control
Additional Control Options

&

- Append to a command to run it in the background

fg

- Brings the most recent background process to the foreground

jobs

- Lists all background jobs

Job Control
Example

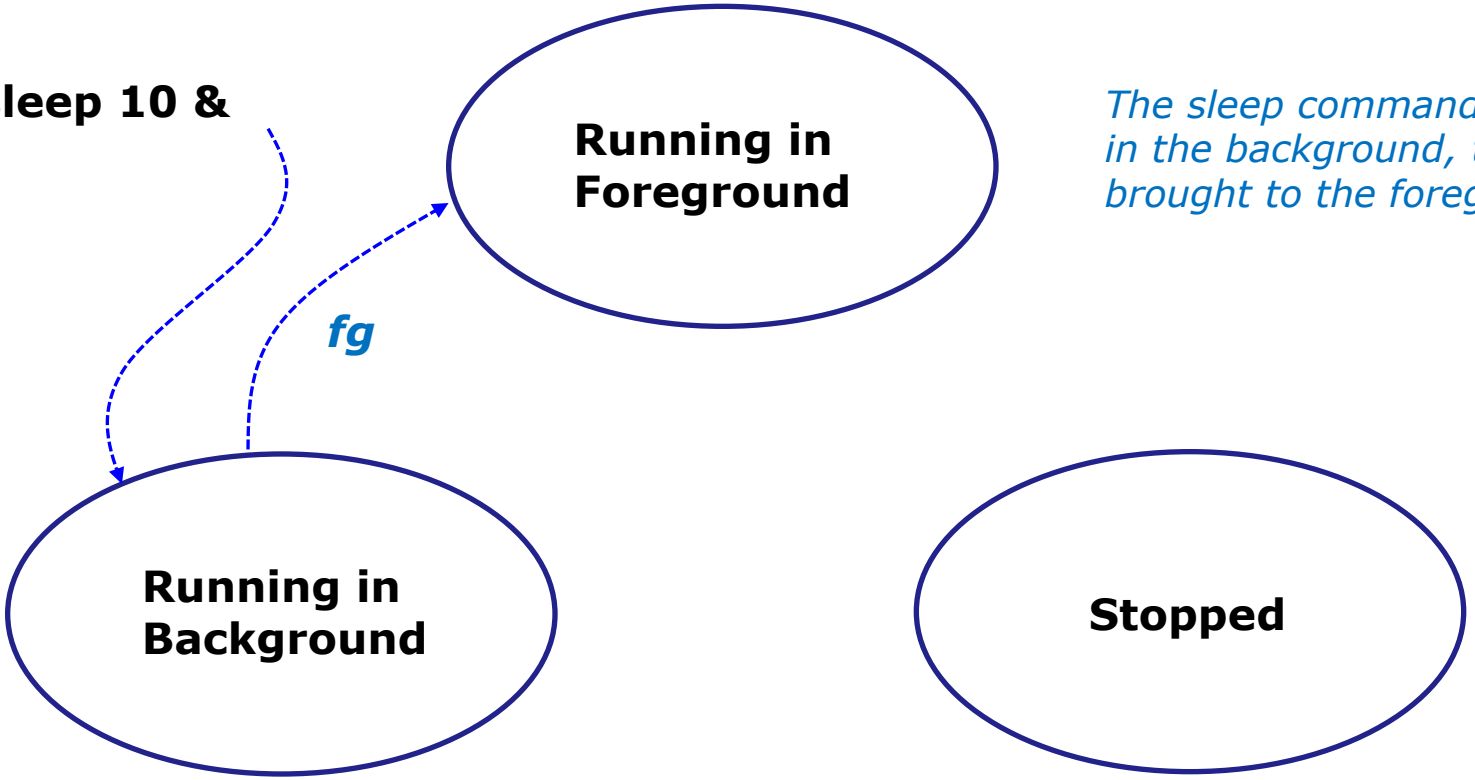

The sleep command is started in the background, then brought to the foreground

Job Control
Example

```
[rsimms@opus ~]$ sleep 10 &
[1] 7761
[rsimms@opus ~]$ jobs
[1]+  Running                 sleep 10 &
[rsimms@opus ~]$ fg
sleep 10
```

*The **&** has **sleep** run in the background and jobs shows the shows it as the one and only background job*

*After **fg**, sleep now runs in the foreground. The prompt is gone. Need to wait until **sleep** finishes for prompt to return.*

```
[rsimms@opus ~]$
[rsimms@opus ~]$
```

***&** is often used when running GUI tools like **firefox** or **wireshark** from the command line. This allows you to keep using the terminal for more commands while those applications run.*

Signals

Signals

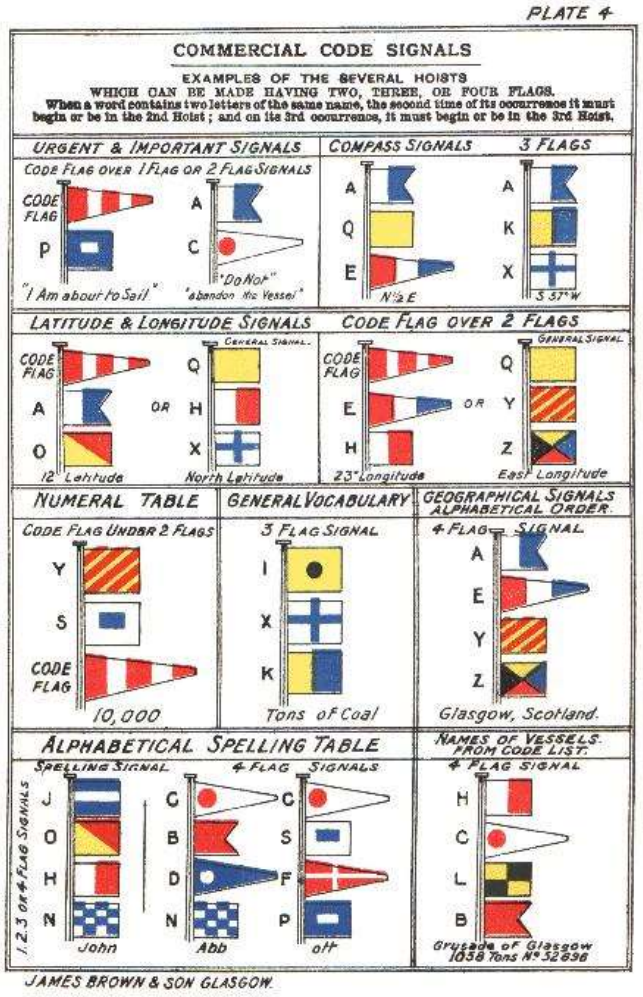
PLATE 4
COMMERCIAL CODE SIGNALS
EXAMPLES OF THE SEVERAL HOISTS
WHICH CAN BE MADE HAVING TWO, THREE, OR FOUR FLAGS.
When a word contains two letters of the same name, the second time of its occurrence it must begin or be in the 2nd Hoist; and on its 3rd occurrence, it must begin or be in the 3rd Hoist.
URGENT & IMPORTANT SIGNALS
CODE FLAG OVER 1 FLAG OR 2 FLAG SIGNALS
CODE FLAG
P
"I Am about to Sail"
A
C
"Do Not"
"abandon the Vessel"
COMPASS SIGNALS
A
Q
E
N½E
3 FLAGS
A
K
X
S 57°W
LATITUDE & LONGITUDE SIGNALS
CODE FLAG
A
O
12° Latitude
GENERAL SIGNAL
Q
OR
H
X
North Latitude
CODE FLAG OVER 2 FLAGS
CODE FLAG
E
H
23° Longitude
GENERAL SIGNAL
Q
OR
Y
Z
East Longitude
NUMERAL TABLE
CODE FLAG UNDER 2 FLAGS
Y
S
CODE FLAG
10,000
GENERAL VOCABULARY
3 FLAG SIGNAL
I
X
K
Tons of Coal
GEOGRAPHICAL SIGNALS ALPHABETICAL ORDER.
4 FLAG SIGNAL
A
E
Y
Z
Glasgow, Scotland.
ALPHABETICAL SPELLING TABLE
SPELLING SIGNAL
1, 2, 3 OR 4 FLAG SIGNALS
J
O
H
N
John
4 FLAG SIGNALS
C
B
D
N
Abb
C
S
F
P
off
NAMES OF VESSELS FROM CODE LIST.
4 FLAG SIGNAL
H
C
L
B
Gruzade of Glasgow
1058 Tons No 52896
JAMES BROWN & SON GLASGOW.

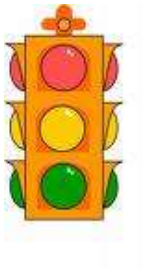

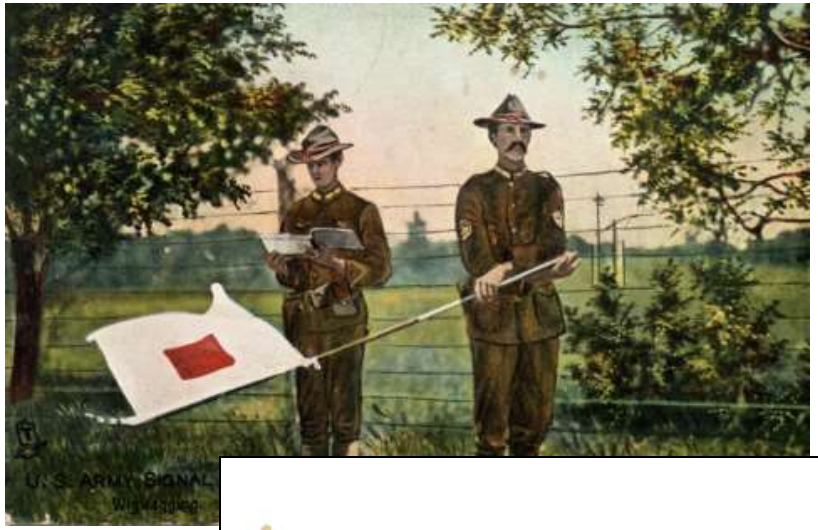
U. S. ARMY SIGNAL


18

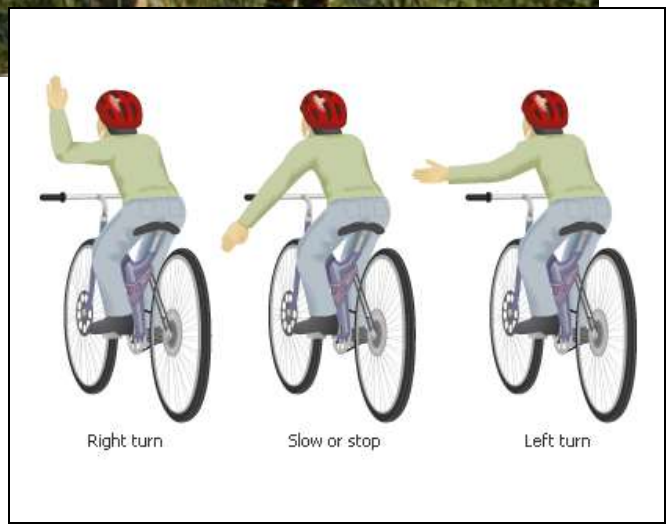
Right turn
Slow or stop
Left turn

Signals

Signals are asynchronous messages sent to processes

Running process getting a signal

Asynchronous means it can happen at any time

Signals

Signals are asynchronous messages sent to processes

They can result in one of three courses of action:

1. be ignored,
2. default action (die)
3. execute some predefined function.

Signals are sent:

- Using the **kill** command: **`$ kill -#`** ***`PID`***
  - Where # is the signal number and PID is the process id.
  - if no signal number is specified, SIGTERM is sent.

- Using special **keystrokes** (e.g. Ctrl-Z for SIGTSTP/20)
  - limited to just a few signals
  - sent to the process running in the foreground

Use kill -l to see all signals

Signals

Signals are asynchronous messages sent to processes

Running process gets a signal

Tools for your toolbox

NEW **kill** - send signal to process (by PID)

NEW **killall** - send signal to process (by name)

kill command

Basic syntax
(see man page for the rest of the story)

kill *<signal> <PID>*

Examples

`kill -s sigquit 14151` *(Send signal SIGQUIT/3 to process 14151)*

`kill -s 3 14151` *(Send signal SIGQUIT/3 to process 14151)*

`kill -3 14151` *(Send signal SIGQUIT/3 to process 14151)*

`kill -9 14151` *(Send signal SIGKILL/9 to process 14151)*

`kill -l` *(list all signal numbers)*

killall command

Basic syntax
(see man page for the rest of the story)

killall *<signal> <process>*

Examples

`killall -s sigquit app` *(Send signal 3 to process named app)*

`killall -s 3 app` *(Send signal 3 to process named app)*

`killall -3 app` *(Send signal 3 to process named app)*

`killall -9 app` *(Send signal 9 to process named app)*

Signals

Use kill -l to see all signals

```
/home/cis90/rodduk $ kill -l
 1) SIGHUP       2) SIGINT       3) SIGQUIT      4) SIGILL
 5) SIGTRAP      6) SIGABRT      7) SIGBUS       8) SIGFPE
 9) SIGKILL     10) SIGUSR1     11) SIGSEGV     12) SIGUSR2
13) SIGPIPE     14) SIGALRM     15) SIGTERM     16) SIGSTKFLT
17) SIGCHLD     18) SIGCONT     19) SIGSTOP     20) SIGTSTP
21) SIGTTIN     22) SIGTTOU     23) SIGURG      24) SIGXCPU
25) SIGXFSZ     26) SIGVTALRM   27) SIGPROF     28) SIGWINCH
29) SIGIO       30) SIGPWR      31) SIGSYS      34) SIGRTMIN
35) SIGRTMIN+1  36) SIGRTMIN+2  37) SIGRTMIN+3  38) SIGRTMIN+4
39) SIGRTMIN+5  40) SIGRTMIN+6  41) SIGRTMIN+7  42) SIGRTMIN+8
43) SIGRTMIN+9  44) SIGRTMIN+10 45) SIGRTMIN+11 46) SIGRTMIN+12
47) SIGRTMIN+13 48) SIGRTMIN+14 49) SIGRTMIN+15 50) SIGRTMAX-14
51) SIGRTMAX-13 52) SIGRTMAX-12 53) SIGRTMAX-11 54) SIGRTMAX-10
55) SIGRTMAX-9  56) SIGRTMAX-8  57) SIGRTMAX-7  58) SIGRTMAX-6
59) SIGRTMAX-5  60) SIGRTMAX-4  61) SIGRTMAX-3  62) SIGRTMAX-2
63) SIGRTMAX-1  64) SIGRTMAX
/home/cis90/rodduk $
```

Signals

SIGHUP	1	Hangup (POSIX)
SIGINT	2	Terminal interrupt (ANSI) ***Ctrl-C***
SIGQUIT	3	Terminal quit (POSIX) ***Ctrl-***
SIGILL	4	Illegal instruction (ANSI)
SIGTRAP	5	Trace trap (POSIX)
SIGIOT	6	IOT Trap (4.2 BSD)
SIGBUS	7	BUS error (4.2 BSD)
SIGFPE	8	Floating point exception (ANSI)
SIGKILL	9	Kill (can't be caught or ignored) (POSIX)
SIGUSR1	10	User defined signal 1 (POSIX)
SIGSEGV	11	Invalid memory segment access (ANSI)
SIGUSR2	12	User defined signal 2 (POSIX)
SIGPIPE	13	Write on a pipe with no reader, Broken pipe (POSIX)
SIGALRM	14	Alarm clock (POSIX)
SIGTERM	15	Termination (ANSI) (default kill signal when not specified)

Signals

SIGSTKFLT	16	Stack fault
SIGCHLD	17	Child process has stopped or exited, changed (POSIX)
SIGCONT	18	Continue executing, if stopped (POSIX)
SIGSTOP	19	Stop executing(can't be caught or ignored) (POSIX)
SIGTSTP	20	Terminal stop signal (POSIX) ***Ctrl-Z or Ctrl-F***
SIGTTIN	21	Background process trying to read, from TTY (POSIX)
SIGTTOU	22	Background process trying to write, to TTY (POSIX)
SIGURG	23	Urgent condition on socket (4.2 BSD)
SIGXCPU	24	CPU limit exceeded (4.2 BSD)
SIGXFSZ	25	File size limit exceeded (4.2 BSD)
SIGVTALRM	26	Virtual alarm clock (4.2 BSD)
SIGPROF	27	Profiling alarm clock (4.2 BSD)
SIGWINCH	28	Window size change (4.3 BSD, Sun)
SIGIO	29	I/O now possible (4.2 BSD)
SIGPWR	30	Power failure restart (System V)

Signals
Special keystrokes

```
/home/cis90/rodduk $ stty -a
speed 38400 baud; rows 26; columns 78; line = 0;
intr = ^C; quit = ^\; erase = ^?; kill = ^U; eof = ^D; eol = <undef>;
eol2 = <undef>; swtch = <undef>; start = ^Q; stop = ^S; susp = ^F; rprnt = ^R;
werase = ^W; lnext = ^V; flush = ^O; min = 1; time = 0;
```

```
[rsimms@opus ~]$ stty -a
speed 38400 baud; rows 39; columns 84; line = 0;
intr = ^C; quit = ^\; erase = ^?; kill = ^U; eof = ^D; eol = <undef>; eol2 = <undef>;
swtch = <undef>; start = ^Q; stop = ^S; susp = ^Z; rprnt = ^R; werase = ^W;
lnext = ^V; flush = ^O; min = 1; time = 0;
```

use Ctrl-C to send a SIGINT/2 "Terminal Interrupt"

or Ctrl-\ to send a SIGQUIT/3 "Terminal Quit"

Signals

Jim's app script

rsimms@opus:/home/cis90/depot

```
#!/bin/sh
#
# app - script to demostrate use of signals
#
# Usage:  run app with no options or parameters
#
# Send signals to it with keystrokes or kill command
#
# Notes:
# stty -echo stop the display of characters typed
# stty echo makes typed characters visible again
# stty susp ^Z sets suspend keystroke to Ctlr-Z (to stop forground processes)
# stty susp @ sets suspend character to @ (to stop foreground processes)
#
trap '' 2  #Ignore SIGINT
trap 'echo -n quit it!' 3 #Handle SIGQUIT
trap 'stty echo susp ^Z;echo ee; echo cleanup;exit' 15 #Handle SIGTERM
clear
banner testing
stty -echo susp @
sleep 1
echo  one
sleep 1
echo two
sleep 1
echo -n thr
while :
do sleep 1
done
~
                                                    13,1          All
```

Signals
Class Exercise

- View Jim's script with: **cat bin/app**
- Look for the three trap handlers
  - Signal 2 (SIGINT)
  - Signal 3 (SIGQUIT)
  - Signal 15 (SIGTERM)

Signals

Benji runs app

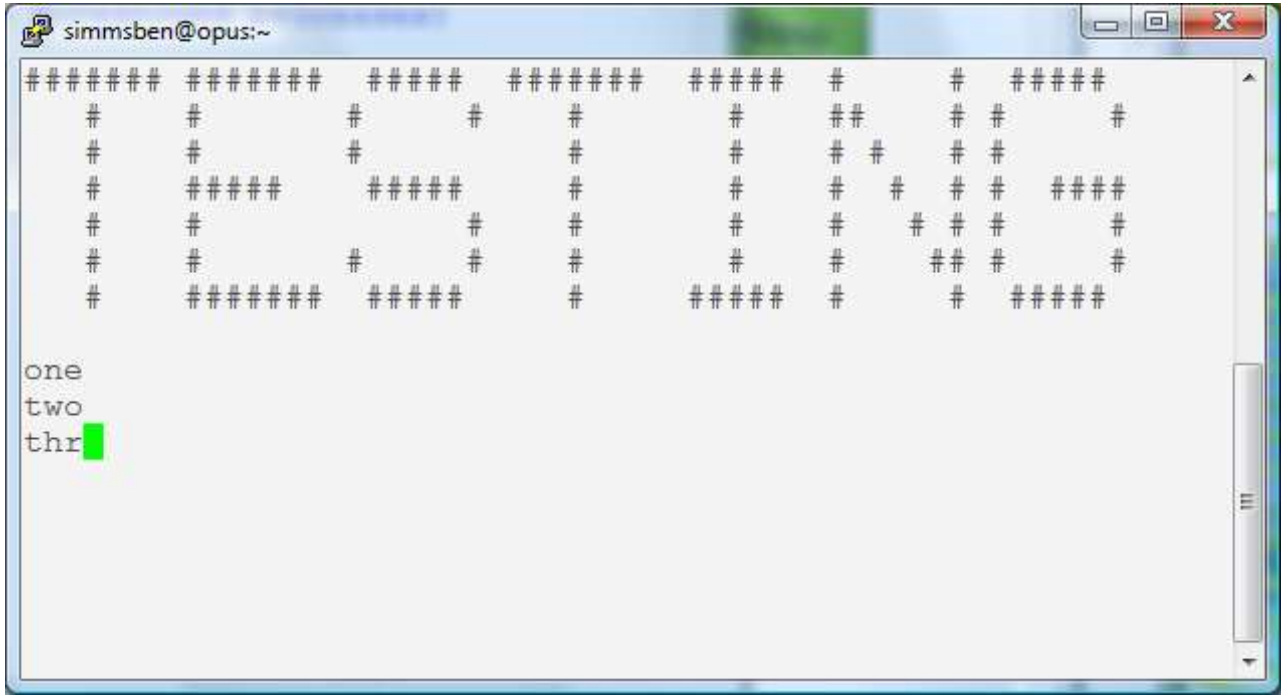

Benji logs in and runs app … uh oh, its stuck !

Signals

Benji runs app

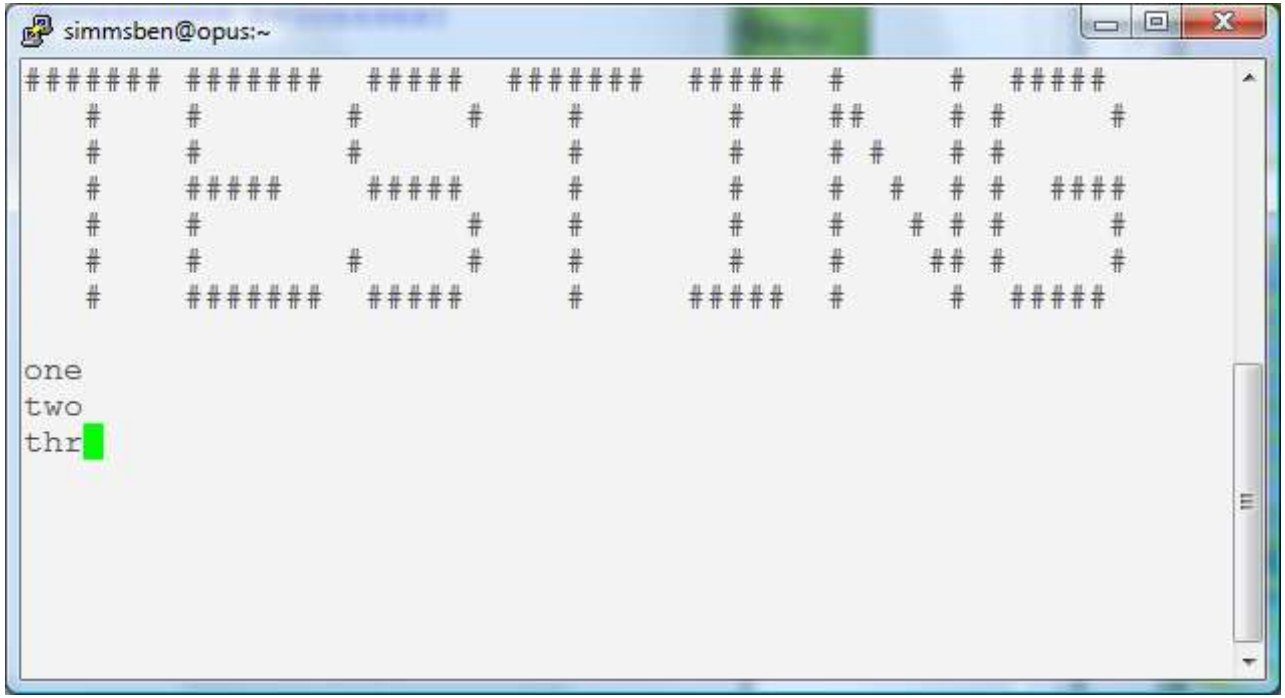

*Benji tries using the keyboard to send a SIGINT/2 using **Ctrl-C** but nothing happens (because app is ignoring SIGINT)*

Signals

Benji runs app

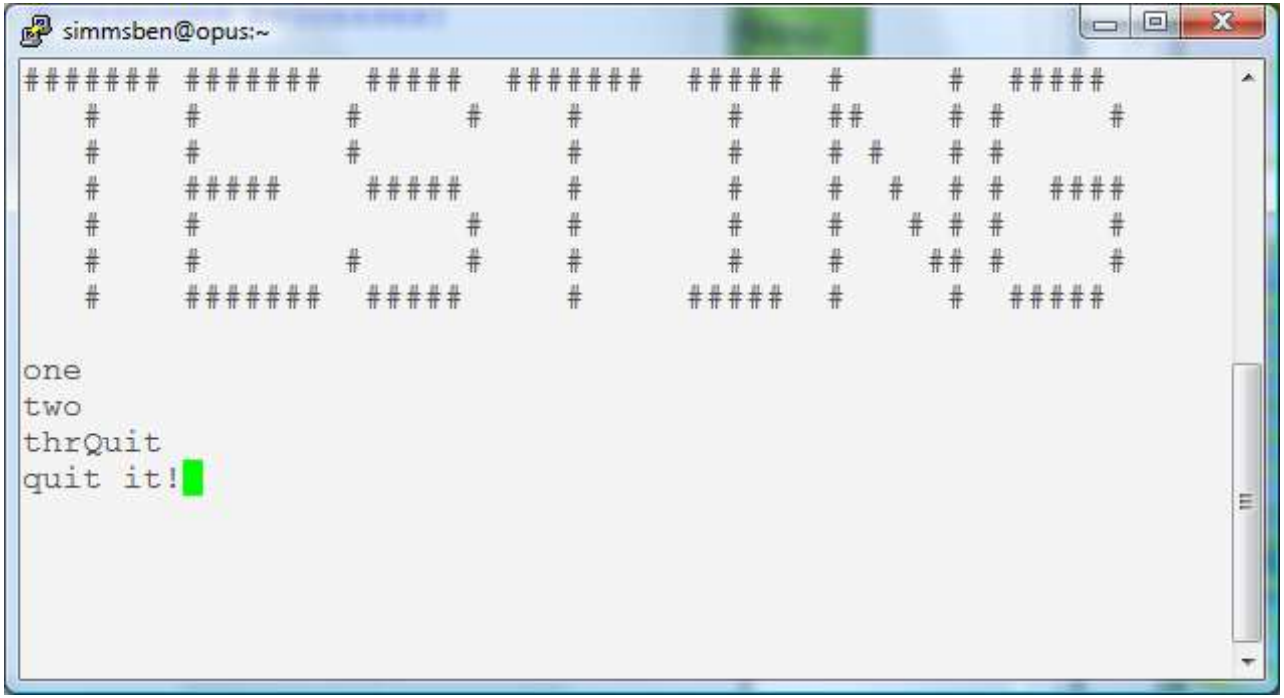

*Benji tries using the keyboard to send a SIGQUIT/3 using **Ctrl-** but app reacts by saying "quit it"*

Signals

Benji runs app

```
roddyduk@opus:~
/home/cis90/roddyduk $ ps -u simmsben
  PID TTY          TIME CMD
 6657 ?        00:00:00 sshd
 6658 pts/1    00:00:00 bash
 7033 ?        00:00:00 sshd
 7034 pts/2    00:00:00 bash
 7065 pts/2    00:00:00 app
 7579 pts/2    00:00:00 sleep
/home/cis90/roddyduk $ kill 7065
-bash: kill: (7065) - Operation not permitted
/home/cis90/roddyduk $
```

*Benji asks his friend Duke to kill off his stalled app process. Duke uses **ps** to look it up but does not have permission to kill it off*

Signals

Benji runs app

simmsben@opus:~

```
one
two
thrQuit
quit it!
```

simmsben@opus:~

```
/home/cis90/simmsben $ ps -u simmsben
  PID TTY          TIME CMD
 6657 ?        00:00:00 sshd
 6658 pts/1    00:00:00 bash
 7033 ?        00:00:00 sshd
 7034 pts/2    00:00:00 bash
 7065 pts/2    00:00:00 app
 7843 pts/2    00:00:00 sleep
 7844 pts/1    00:00:00 ps
/home/cis90/simmsben $ kill -2 7065
/home/cis90/simmsben $
```

*Benji logs into another Putty session and sends a SIGINT/2 using the **kill** command …. but nothing happens*

Signals

Benji runs app

simmsben@opus:~

```
one
two
thrQuit
quit it!quit it!quit it!
```

```
/home/cis90/simmsben $ kill -3 7065
/home/cis90/simmsben $ kill -3 7065
/home/cis90/simmsben $
```

Benji ups the anty and sends two SIGQUIT/3's but the app process shrugs them off with "quit it!" messages

Signals

Benji runs app

```
simmsben@opus:~
####### #######  #####  #######  #####  #     #  #####
   #    #       #     #    #       #    ##    # #     #
   #    #       #          #       #    # #   # #
   #    #####    #####     #       #    #  #  # #  ####
   #    #              #    #       #    #   # # #     #
   #    #       #     #    #       #    #    ## #     #
   #    #######  #####     #     #####  #     #  #####

one
two
thrQuit
quit it!quit it!quit it!ee
cleanup
/home/cis90/simmsben $
```

```
/home/cis90/simmsben $ kill -3 7065
/home/cis90/simmsben $ kill -15 7065
/home/cis90/simmsben $
```

Benji decides to send a SIGTERM/15 this time and the app process finishes, cleans up and exits

Signals

Benji runs app

simmsben@opus:~

```
/home/cis90/simmsben $ ps -u simmsben
  PID TTY          TIME CMD
 6657 ?        00:00:00 sshd
 6658 pts/1    00:00:00 bash
 7033 ?        00:00:00 sshd
 7034 pts/2    00:00:00 bash
 8237 pts/2    00:00:00 app
 8279 pts/2    00:00:00 sleep
 8280 pts/1    00:00:00 ps
/home/cis90/simmsben $
```

simmsben@opus:~

```
one
two
thr
```

The same thing happens again another day. This time Benji does not care what happens with app …

Signals

Benji runs app

simmsben@opus:~

```
one
two
thrKilled
/home/cis90/simmsben $
```

simmsben@opus:~

```
/home/cis90/simmsben $ ps -u simmsben
  PID TTY          TIME CMD
 6657 ?        00:00:00 sshd
 6658 pts/1    00:00:00 bash
 7033 ?        00:00:00 sshd
 7034 pts/2    00:00:00 bash
 8237 pts/2    00:00:00 app
 8279 pts/2    00:00:00 sleep
 8280 pts/1    00:00:00 ps
/home/cis90/simmsben $ kill -9 8237
/home/cis90/simmsben $
```

So he sends a SIGKILL/9 this time … and app never even sees it coming …. poof … app is gone

Signals
Class Exercise

- Run app
- Try sending it a SIGINT from the keyboard (Ctrl-C)
- Try sending it a SIGQUIT from the keyboard (Ctrl-\)
- Login to another Putty session
  - Use the ps -u $LOGNAME to find the app PID
  - Send it a SIGINT (kill -2 PID)
  - Send it a SIGQUIT (kill -3 PID)
  - Now send either a SIGKILL (9) or SIGTERM (15)

Load Balancing (scheduling)

Load Balancing with **at** command

So that the multiprocessing CPU on a UNIX system does not get overloaded, some processes need to be run during low peak hours such as early in the morning or later in the day.

The **at** command reads from **stdin** for a list of commands to run, and begins running them at the time of day specified as the first argument.

Any output sent to **stdout** or **stderr** by the list of commands will be emailed to the user unless redirected elsewhere.

Tools for your toolbox

- NEW **at** - schedule a job to run in the future
- NEW **atq** - list queue of pending jobs
- NEW **atrm** - remove a pending job

at command

Basic syntax

(see man page for the rest of the story)

at <time>

(the at command will then read commands from stdin)

Examples

```
at 3:00pm wednesday
at> echo Meet with Sarah | mail -s 'Reminder' simben90
at> Ctrl-D
```

End of file means no more commands to process

at prompt (you don't type this, the at command does)

at command

Specifying future time examples:

```
at now + 5 minutes
at now + 2 hours
at now + 1 week
at 1:00AM
at 3:00PM wednesday
at 12:00AM 12/25/2014
at teatime
```

Activity

You try it:

```
/home/cis90/simben $ at now + 1 minute
at> banner Hola Benji
at> <EOT>
job 875 at 2014-11-03 14:11
/home/cis90/simben $ mail
```

Use Ctrl-D for End of File

The read your mail a minute later

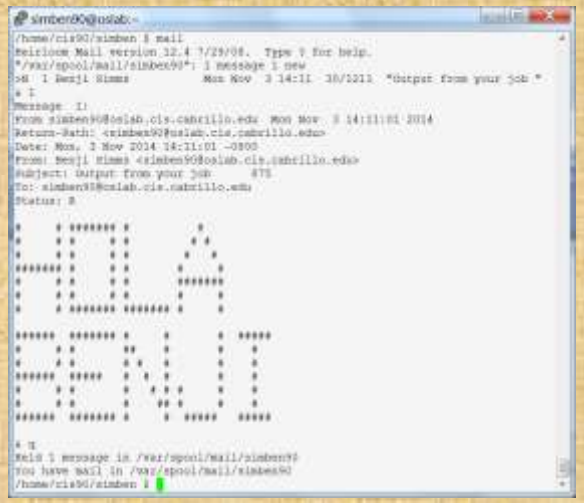

Write in the chat window the name of the sender of the email sent to you

Activity

You try it:

```
/home/cis90/simben $ tty
/dev/pts/2
/home/cis90/simben $ at now + 1 minute
at> echo > /dev/pts/2
at> banner Hola Benji > /dev/pts/2
at> <EOT>
job 873 at 2014-11-03 14:04
```

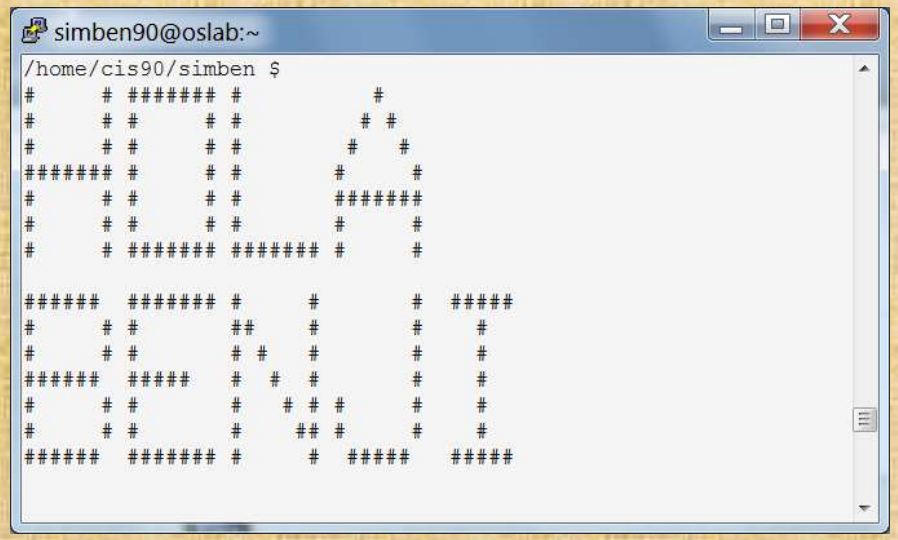

Write in the chat window the reason for dong a echo command before the banner command when writing to the terminal device

at examples

```
at 12:00 am wednesday
  chmod 700 /home/rsimms/turnin

at 9:00 am wednesday
  chmod 750 /home/rsimms/turnin
```

```
at 11:59pm
  cat files.out bigshell > lab08
  cp lab08 /home/rsimms/turnin/cis90/lab08.$LOGNAME
```

```
at 2:50pm tuesday
  cp /etc/nologin.bak /etc/nologin
  shutdown -P +10
```

at job management

```
/home/cis90/simben $ echo chmod 000 letter | at 3:00pm
job 878 at 2014-11-03 15:00
/home/cis90/simben $ echo chmod 644 letter | at 3:05pm
job 879 at 2014-11-03 15:05
/home/cis90/simben $ echo chmod 640 letter | at 1:00am friday
job 880 at 2014-11-07 01:00
```

```
/home/cis90/simben $ atq
879     2014-11-03 15:05 a simben90
880     2014-11-07 01:00 a simben90
878     2014-11-03 15:00 a simben90
```

*The **atq** command lists the queue of pending jobs scheduled to run in the future.*

```
/home/cis90/simben $ atrm 879
/home/cis90/simben $ atq
880     2014-11-07 01:00 a simben90
878     2014-11-03 15:00 a simben90

/home/cis90/simben $ atrm 878 880
/home/cis90/simben $ atq
/home/cis90/simben $
```

*The **atrm** command is used to remove jobs from the queue.*

at command error handling

```
/home/cis90/simben $ at now + 1 minute
at> kitty letter
at> <EOT>
job 150 at 2011-04-20 10:47

/home/cis90/simben $ atq
150     2011-04-20 10:47 a simmsben
/home/cis90ol/simmsben $ atq

/home/cis90/simben $ mail
Mail version 8.1 6/6/93.  Type ? for help.
"/var/spool/mail/simben": 1 message 1 new
>N  1 simben@Opus.cabril  Wed Apr 20 10:47  16/709   "Output from your job "
& 1
Message 1:
From simben@Opus.cabrillo.edu  Wed Apr 20 10:47:01 2011
Date: Wed, 20 Apr 2011 10:47:01 -0700
From: Benji Simms <simben@Opus.cabrillo.edu>
Subject: Output from your job      150
To: simben@Opus.cabrillo.edu

/bin/bash: line 2: kitty: command not found

&
```

*Oops, specified a non-existent command to run in the future (**kitty** should have been **cat**)*

Because, you may not be online when the command runs, any error messages are mailed to you.

Viewing an at jobs

```
/home/cis90/simben $ atq
882     2014-11-03 15:05 a simben90
881     2014-11-03 15:00 a simben90
883     2014-11-07 01:00 a simben90
```

Use the -c option to view the contents of an at job

```
/home/cis90/simben $ at -c 883
```

```
#!/bin/sh
# atrun uid=1201 gid=190
# mail simben90 0
umask 2
HOSTNAME=oslab.cis.cabrillo.edu; export HOSTNAME
SELINUX_ROLE_REQUESTED=; export SELINUX_ROLE_REQUESTED
SHELL=/bin/bash; export SHELL
HISTSIZE=1000; export HISTSIZE
SSH_CLIENT=2601:9:6680:53b:8d5f:4722:4af4:186e\ 59885\ 2220; export SSH_CLIENT
SELINUX_USE_CURRENT_RANGE=; export SELINUX_USE_CURRENT_RANGE
QTDIR=/usr/lib/qt-3.3; export QTDIR
QTINC=/usr/lib/qt-3.3/include; export QTINC
SSH_TTY=/dev/pts/2; export SSH_TTY
USER=simben90; export USER
LS_COLORS=rs=0:di=01\;34:ln=01\;36:mh=00:pi=40\;33:so=01\;35:do=01\;35:bd=40\;33\;01:cd=40\;33\;01:or=40\;31\;01:mi=01\;05\;37\;41:su=37\;41:sg=30\;43:ca=30\;41:tw=30\;42:ow=34\;42:st=37\;44:
ex=01\;32:\*.tar=01\;31:\*.tgz=01\;31:\*.arj=01\;31:\*.taz=01\;31:\*.lzh=01\;31:\*.lzma=01\;31:\*.tlz=01\;31:\*.txz=01\;31:\*.zip=01\;31:\*.z=01\;31:\*.Z=01\;31:\*.dz=01\;31:\*.gz=01\;31:\*.l
z=01\;31:\*.xz=01\;31:\*.bz2=01\;31:\*.tbz=01\;31:\*.tbz2=01\;31:\*.bz=01\;31:\*.tz=01\;31:\*.deb=01\;31:\*.rpm=01\;31:\*.jar=01\;31:\*.rar=01\;31:\*.ace=01\;31:\*.zoo=01\;31:\*.cpio=01\;31:\
*.7z=01\;31:\*.rz=01\;31:\*.jpg=01\;35:\*.jpeg=01\;35:\*.gif=01\;35:\*.bmp=01\;35:\*.pbm=01\;35:\*.pgm=01\;35:\*.ppm=01\;35:\*.tga=01\;35:\*.xbm=01\;35:\*.xpm=01\;35:\*.tif=01\;35:\*.tiff=01\
;35:\*.png=01\;35:\*.svg=01\;35:\*.svgz=01\;35:\*.mng=01\;35:\*.pcx=01\;35:\*.mov=01\;35:\*.mpg=01\;35:\*.mpeg=01\;35:\*.m2v=01\;35:\*.mkv=01\;35:\*.ogm=01\;35:\*.mp4=01\;35:\*.m4v=01\;35:\*.
mp4v=01\;35:\*.vob=01\;35:\*.qt=01\;35:\*.nuv=01\;35:\*.wmv=01\;35:\*.asf=01\;35:\*.rm=01\;35:\*.rmvb=01\;35:\*.flc=01\;35:\*.avi=01\;35:\*.fli=01\;35:\*.flv=01\;35:\*.gl=01\;35:\*.dl=01\;35:
\*.xcf=01\;35:\*.xwd=01\;35:\*.yuv=01\;35:\*.cgm=01\;35:\*.emf=01\;35:\*.axv=01\;35:\*.anx=01\;35:\*.ogv=01\;35:\*.ogx=01\;35:\*.aac=01\;36:\*.au=01\;36:\*.flac=01\;36:\*.mid=01\;36:\*.midi=0
1\;36:\*.mka=01\;36:\*.mp3=01\;36:\*.mpc=01\;36:\*.ogg=01\;36:\*.ra=01\;36:\*.wav=01\;36:\*.axa=01\;36:\*.oga=01\;36:\*.spx=01\;36:\*.xspf=01\;36:; export LS_COLORS
USERNAME=; export USERNAME
MAIL=/var/spool/mail/simben90; export MAIL
PATH=/usr/lib/qt-3.3/bin:/usr/local/bin:/bin:/usr/bin:/usr/local/sbin:/usr/sbin:/sbin:/home/cis90/simben/../bin:/home/cis90/simben/bin:.; export PATH
PWD=/home/cis90/simben; export PWD
LANG=en_US.UTF-8; export LANG
SELINUX_LEVEL_REQUESTED=; export SELINUX_LEVEL_REQUESTED
HISTCONTROL=ignoredups; export HISTCONTROL
SHLVL=1; export SHLVL
HOME=/home/cis90/simben; export HOME
BASH_ENV=/home/cis90/simben/.bashrc; export BASH_ENV
LOGNAME=simben90; export LOGNAME
QTLIB=/usr/lib/qt-3.3/lib; export QTLIB
CVS_RSH=ssh; export CVS_RSH
SSH_CONNECTION=2601:9:6680:53b:8d5f:4722:4af4:186e\ 59885\ 2607:f380:80f:f425::230\ 2220; export SSH_CONNECTION
LESSOPEN=\|/usr/bin/lesspipe.sh\ %s; export LESSOPEN
G_BROKEN_FILENAMES=1; export G_BROKEN_FILENAMES
cd /home/cis90/simben || {
        echo 'Execution directory inaccessible' >&2
        exit 1
}
${SHELL:-/bin/sh} << 'marcinDELIMITER7acf33a1'
chmod 640 letter

marcinDELIMITER7acf33a1
/home/cis90/simben $
```

reduced in size to fit on slide

All these environment variables must be set to appropriate values so your commands since you may be no longer logged in

This is where you will see your own commands

Activity

Schedule an email reminder

```
/home/cis90/simben $ at 16:30
at> echo "It's time to go for a walk" > /tmp/message.benji
at> echo "Get Homer to come too" >> /tmp/message.benji
at> cat /tmp/message.benji | mail -s "Reminder" simben90
at> rm /tmp/message.benji
at> <EOT>
/home/cis90/simben $
```

simben90@oslab:~

```
You have new mail in /var/spool/mail/simben90
/home/cis90/simben $ mail
Heirloom Mail version 12.4 7/29/08.  Type ? for help.
"/var/spool/mail/simben90": 2 messages 1 new
    1 Benji Simms           Mon Nov  3 14:11  31/1222  "Output from your job      875"
>N  2 Benji Simms           Mon Nov  3 16:30  21/854   "Reminder"
& 2
Message  2:
From simben90@oslab.cis.cabrillo.edu  Mon Nov  3 16:30:01 2014
Return-Path: <simben90@oslab.cis.cabrillo.edu>
From: Benji Simms <simben90@oslab.cis.cabrillo.edu>
Date: Mon, 03 Nov 2014 16:30:01 -0800
To: simben90@oslab.cis.cabrillo.edu
Subject: Reminder
User-Agent: Heirloom mailx 12.4 7/29/08
Content-Type: text/plain; charset=us-ascii
Status: R

It's time to go for a walk
Get Homer to come too

&
```


Assignment

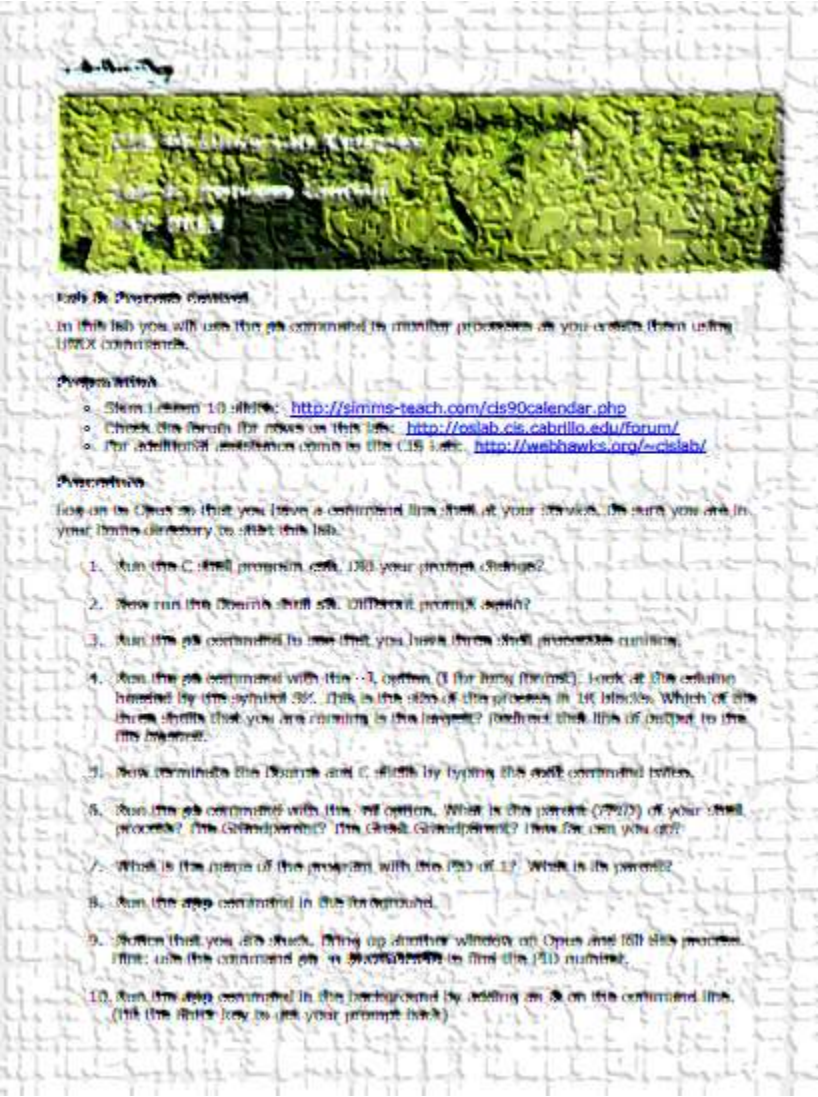

Lab 8

Doesn't take too long but don't wait till the last minute on this lab!

Wrap up

New commands:

Ctrl-Z or F	Suspends a foreground process
bg	Resumes suspended process
&	Runs command in the background
fg	Brings background job to foreground
jobs	show background jobs
kill	Send a signal to a process by PIB
killall	Send a signal to a process by name
at	Run job once in the future
atq	Show all *at* jobs queued to run
atrm	Remove *at* jobs from queue
sleep	Sleep for specified amount of time
stty	Terminal control

Next Class

Assignment: Check Calendar Page on web site to see what is due next week.

Lab 8 due

Quiz #8 questions for next class:

- What command shows the current running processes?
- Name four states a process can be in.
- What is the difference between the fork and exec system calls?

Test 2

Notes to instructor

[ ] Remove real test password on Blackboard

[ ] Unlock accounts on real test system

```
/root/test-accounts//unlock-cis90-accounts
```

Practice Test System (end)

```
at 2:30pm november 4
  cp /etc/nologin.bak /etc/nologin
  shutdown -P +10 "Practice test period ending."
```

Real Test System (start and end)

```
at 3pm november 4
  rm /etc/nologin

at 11:50pm november 4
  shutdown -P +11 "Test period ending."

at 11:59pm november 4
  cp /etc/nologin.bak /etc/nologin
```

Test Instructions

HONOR CODE:

This test is open book, open notes, and open computer. HOWEVER, you must work alone. You may not discuss the test questions or answers with others during the test period. You may not ask or receive assistance from anyone other than the instructor when doing this test. Likewise you may not give any assistance to anyone taking the test.

INSTRUCTIONS:

Test system: sun-hwa-t2.cis.cabrillo.edu (port 22)

This test should be completed using the sun-hwa-t2 system only. Because this system is on a private network log into Opus first then ssh into sun-hwa-t2.

Grading will be based on your answers AND that you correctly implemented the "DO THIS FIRST" portion of each question.

If you get stuck on a question you can ask the instructor for the answer and forfeit the points. The instructor will be available during the classroom test and available by email later in the evening from 8:00-10:PM.

Please KEEP YOUR ANSWERS TO A SINGLE LINE ONLY !!

This test must be completed in one sitting. The submittal will be made automatically when the time is up. If you submit early by accident you will not be able to re-enter and continue. If that happens don't panic! Just email the instructor any remaining answers before the time is up.

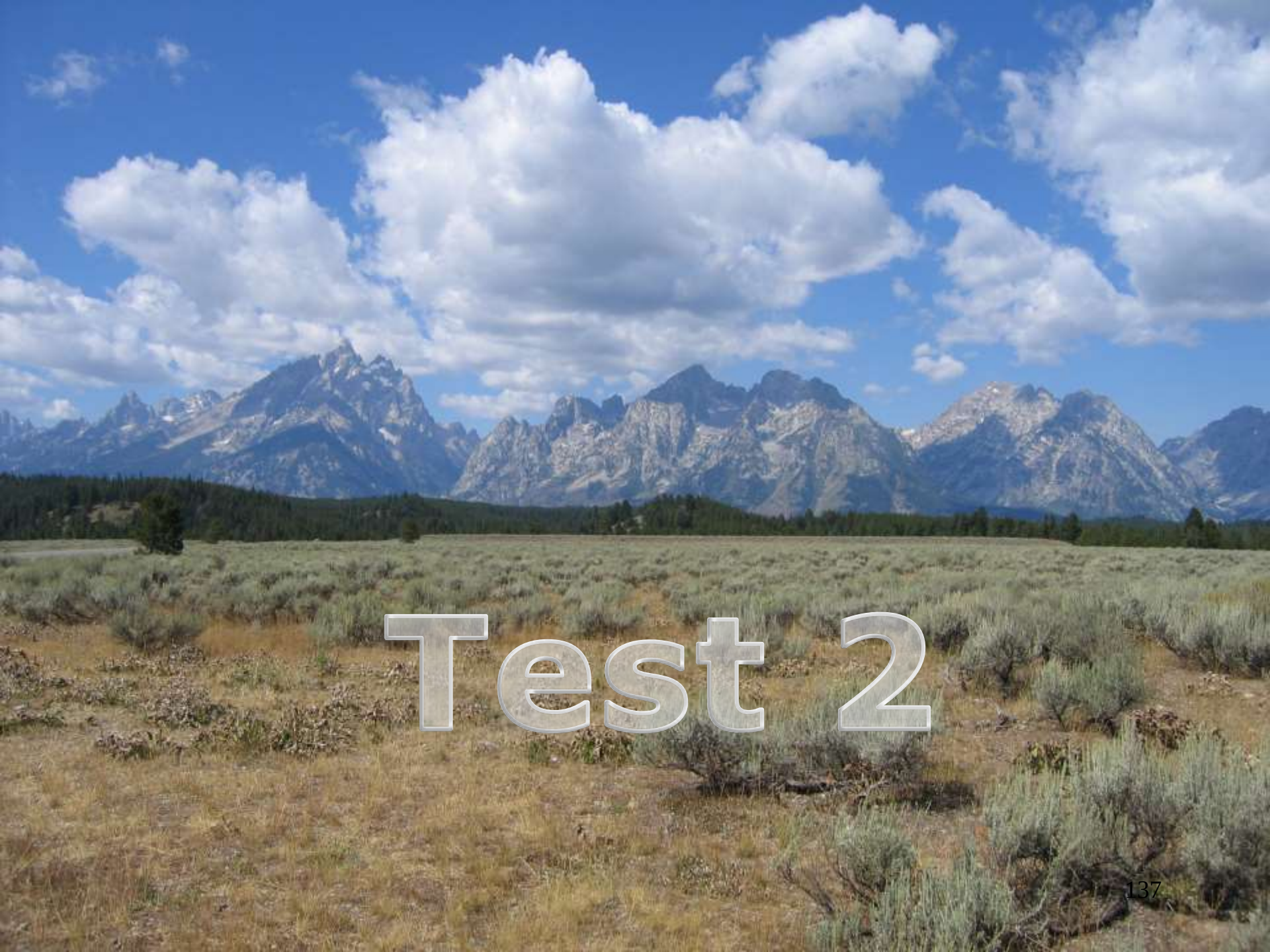

Test 2

Backup

umask Review

umask summary

- Use the **umask** command to specify the permissions you want stripped from <u>future</u> new files and directories
- Does not change permissions on existing files

To determine permissions on a new file or directory apply the umask to the initial permission starting point:

- For new files, start with ***666***
- For new directories, start with ***777***
- *For file copies, start with* ***the permission on the source file being copied***

With a umask of 033 what permissions would a newly created <u>directory</u> have?

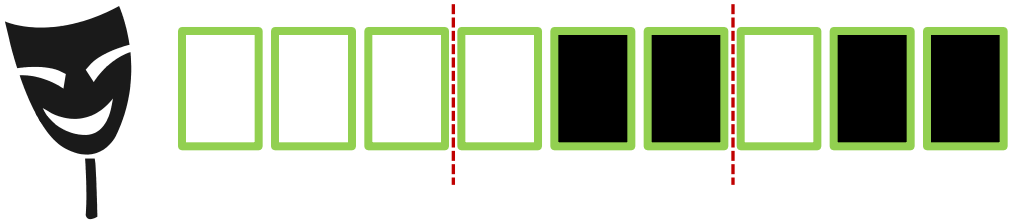

umask setting of 033 strips these bits: --- -wx -wx

Example 1 - new directory

With a umask of 033 what permissions would a newly created <u>directory</u> have?

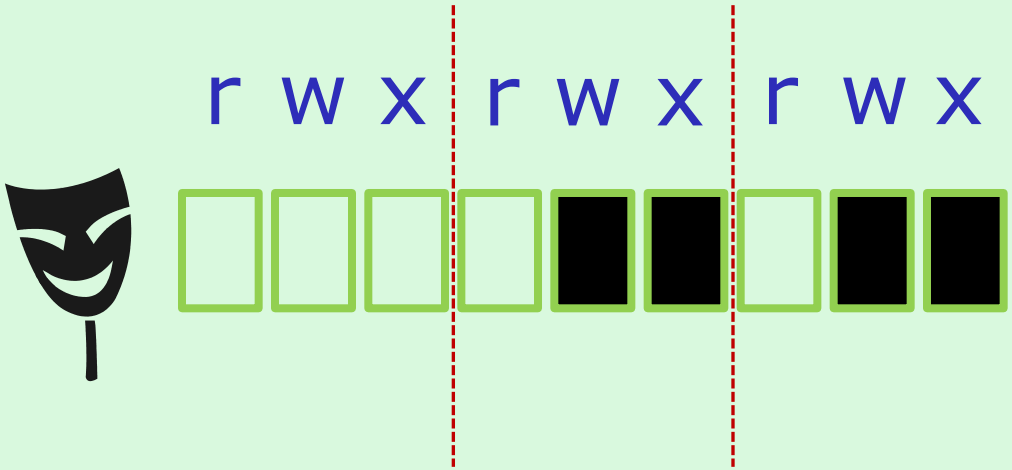

starting point = 777 (new directory)

umask setting of 033 strips these bits: --- -wx -wx

Example 1 - new directory

With a umask of 033 what permissions would a newly created <u>directory</u> have?

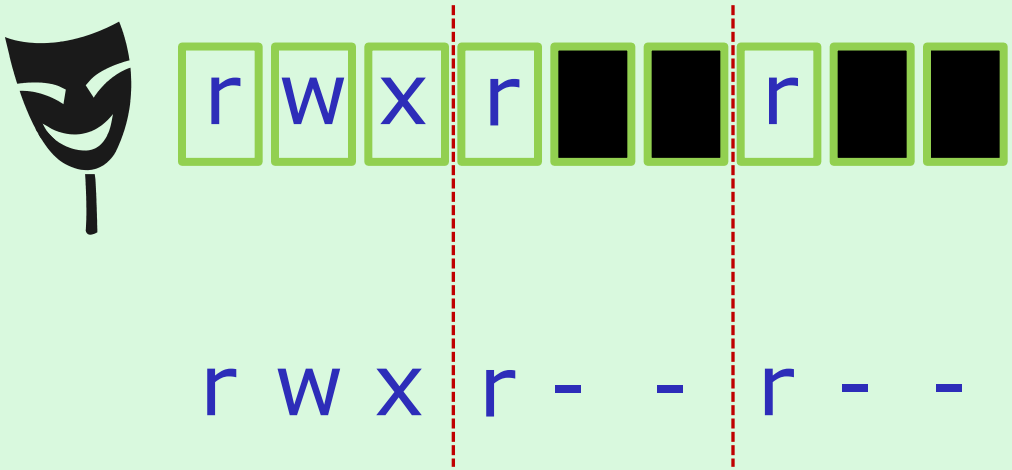

starting point = 777 (new directory)

umask setting of 033 strips these bits: --- -wx -wx

Answer: 744

Verify your answer on Opus:

```
/home/cis90ol/simmsben $ umask 033
/home/cis90ol/simmsben $ mkdir brandnewdir
/home/cis90ol/simmsben $ ls -ld brandnewdir/
drwxr--r-- 2 simmsben cis90ol 4096 Apr 21 12:46 brandnewdir/
```

With a umask of 077 what permissions would a newly created <u>file</u> have?

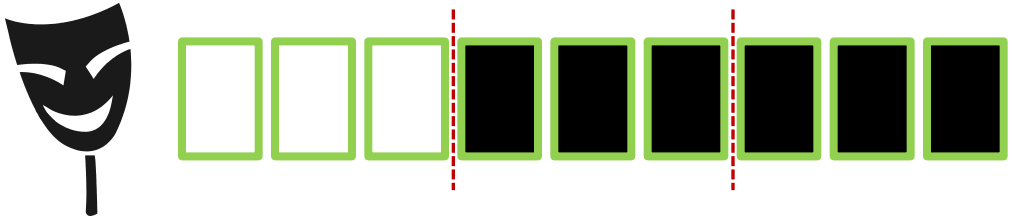

From issuing **umask 077**

Example 2 - new file

With a umask of 077 what permissions would a newly created <u>file</u> have?

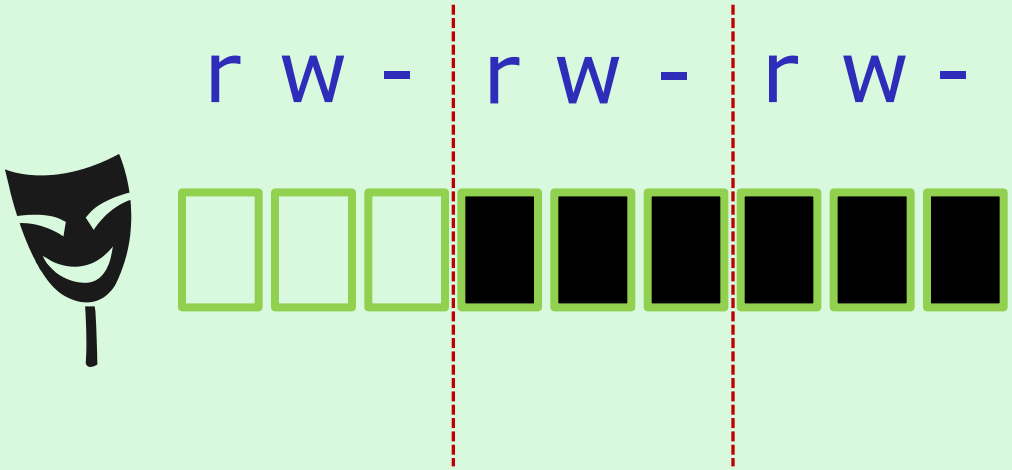

starting point = 666 (new file)

umask setting of 077 strips these bits: --- rwx rwx

Example 2 - new file

With a umask of 077 what permissions would a newly created file have?

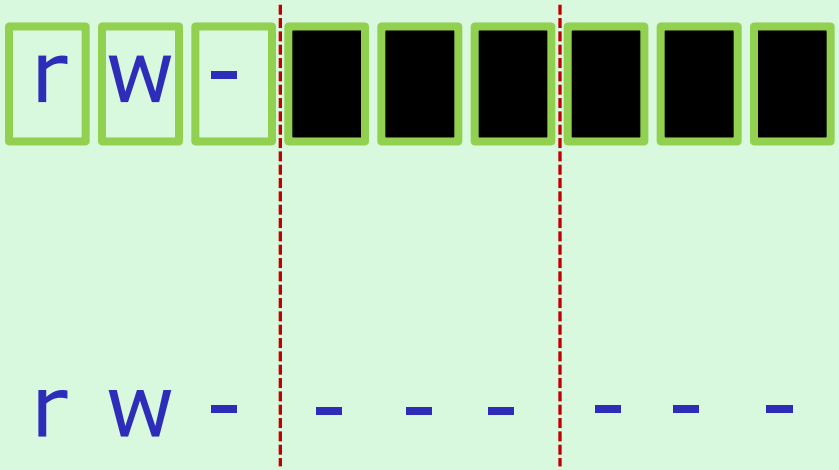

starting point = 666 (new file)

umask setting of 077 strips these bits: --- rwx rwx

Answer: 600

Verify your answer on Opus:

```
/home/cis90ol/simmsben $ umask 077
/home/cis90ol/simmsben $ touch brandnewfile
/home/cis90ol/simmsben $ ls -l brandnewfile
-rw------- 1 simmsben cis90ol 0 Apr 21 12:50 brandnewfile
```

If umask=022 and *cinderella* file permissions=622

What would the permissions be on the file *cinderella.bak* after:
cp cinderella cinderella.bak

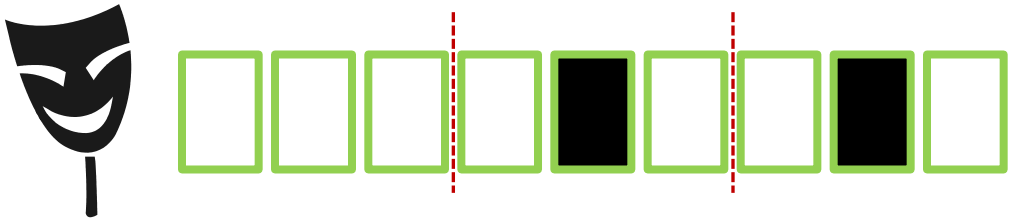

From issuing **umask 022**

Example 2 - file copy

If umask=022 and the *cinderella* file permissions=622

What would the permissions be on the file *cinderella.bak* after:
cp cinderella cinderella.bak

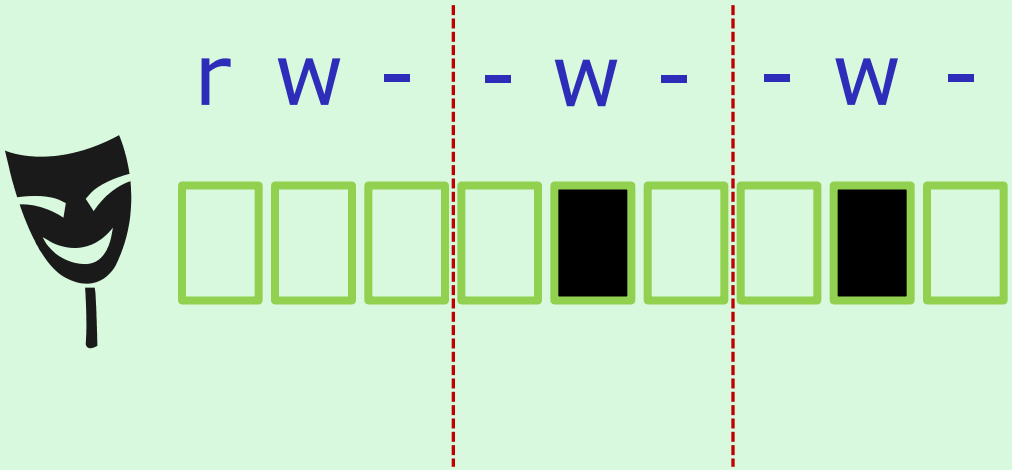

starting point = 622
(source file permissions)

umask setting of 022 strips these bits: --- -w- -w-

Example 2 - file copy

If umask=022 and the *cinderella* file permissions=622

What would the permissions be on the file *cinderella.bak* after:
cp cinderella cinderella.bak

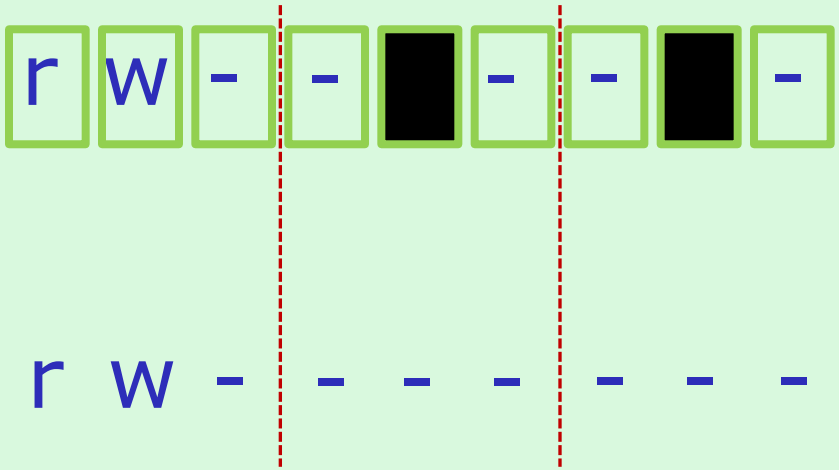

starting point = 622 (source file permissions)

umask setting of 022 strips these bits: --- -w- -w-

Answer: 600

Verify your answer on Opus:

```
/home/cis90ol/simmsben $ touch cinderella
/home/cis90ol/simmsben $ chmod 622 cinderella
/home/cis90ol/simmsben $ umask 022
/home/cis90ol/simmsben $ cp cinderella cinderella.bak
/home/cis90ol/simmsben $ ls -l cinderella.bak
-rw------- 1 simmsben cis90ol 0 Apr 21 12:53 cinderella.bak
```